nyle water heating systems

c LC us

C90A Air Source Heat Pump Water Heater

INSTALLATION MANUAL

HeatWater.com | WaterSales@nyle.com | 800-777-6953

MADE IN USA

For R513A Heat Pumps

IM-C90A-091724

Contents

Introduction **4**

Safety Information **4**

Precautions 5

Grounding Instructions 5

General Description **6**

Purpose 6

Usage 6

Flexible Installation 6

Controls and Electrical 6

Performance Specifications and Requirements **7**

Expanded Performance Data 7

Electrical Specifications 8

Sound Pressure Data 8

Physical Specifications and Clearances **9**

Dimensions **11**

Before Ordering Your Heat Pump **12**

Cold Climate Installation Considerations **12**

Unit Diagram and Key Components **13**

Heat Pump Installation **14**

Required Tools and Materials 14

Rough-In Checklist 14

Transportation, Placement, Mounting 14

Water Quality **17**

Water Piping **17**

Piping Considerations 18

Typical Water Piping Process 18

Single-pass with Swing in Series Piping 19

Multi-pass Piping 20

Condensate Piping **21**

Power Wiring **22**

Control Wiring **23**

Control Wiring Installation 24

Field Wiring Control Points 24

Single-pass Tank Sensors 25

Multi-pass Tank Sensors 25

Optional Ducting and Ventilation **26**

Configuration **28**

Heat Pump Controller Screens 28

Configurable Modes 28

Universal Configuration Options 28

Single-pass Modes – Tank Mode for Single-pass 29

Remote Mode for Single-pass 30

Multi-pass Modes – Tank Mode for Multi-pass 31

Remote Mode Sequence of Operation for Multi-pass 32

Pre-Startup Checklist **33**

Placement and Physical Checks 33

Air and Ducting Checks 33

Water and Piping Checks 33

Condensate Management Checks 33

Electrical Checks 33

Final Checks 33

Startup Procedure **34**

Troubleshooting **34**

Routine Maintenance **39**

Limited Warranty **40**

Introduction

Thank you for your purchase of a C90A air source heat pump water heater! With this purchase, you now own one of the most efficient and reliable large-volume water heaters available in the world today. This unit will produce potable hot water from a highly efficient and capable heat pump, helping end users reach their carbon reduction, electrification, efficiency, and operating cost reduction goals.

C-Series heat pumps use R513A refrigerant, are available in single-pass or multi-pass configurations, are capable of providing single-pass water heating to appropriate external storage vessels with up to 160°F water, and can perform at outdoor temperatures as low as 35°F. Models are available for 230V and 460V 3-phase power, include internal power quality monitoring, and all units are ready to be integrated into BMS systems with the purchase of an additional BMS Gateway accessory. All C90A heat pumps use high static blower fans which are suitable for ducted or ductless applications.

Nyle's C-Series units are not intended for primary space conditioning. When installed in suitable conditioned spaces, they can provide supplemental cooling and/or dehumidification benefits.

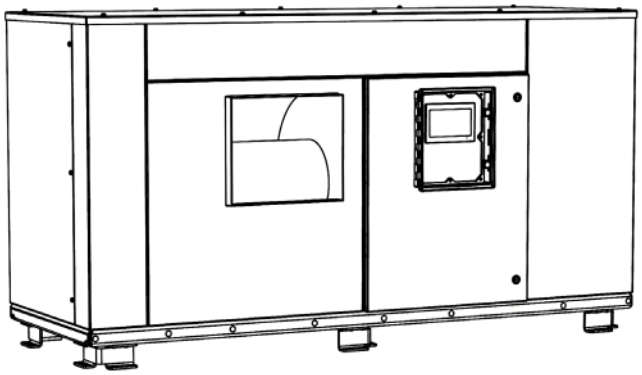

C90A Air Source Heat Pump Water Heater

Safety Information

The proper installation, use and servicing of this commercial heat pump water heater is extremely important to your safety and the safety of others.

Many safety-related messages and instructions have been provided in this manual and on your own heat pump water heater to warn you and others of a potential injury hazard. Read and obey all safety messages and instructions throughout this manual. It is very important that the meaning of each safety message is understood by you and others who install, use, or service this heat pump water heater

⚠	This is the safety alert symbol. It is used to alert you to potential personal injury hazards. Obey all safety messages that follow this symbol to avoid possible injury or death.

⚠ DANGER

DANGER indicates an imminently hazardous situation which, if not avoided, will result in injury or death.

⚠ WARNING

WARNING indicates a potentially hazardous situation which, if not avoided, could result in injury or death.

⚠ CAUTION

CAUTION indicates a potentially hazardous situation which, if not avoided, could result in minor or moderate injury.

CAUTION

CAUTION used without the safety alert symbol indicates a potentially hazardous situation which, if not avoided, could result in property damage.

All safety messages will generally tell you about the type of hazard, what can happen if you do not follow the safety message, and how to avoid the risk of injury.

The California Safe Drinking Water and Toxic Enforcement Act requires the Governor of California to publish a list of substances known to the State of California to cause cancer, birth defects, or other reproductive harm, and requires businesses to warn of potential exposure to such substances.

This product contains a chemical known to the State of California to cause cancer, birth defects, or other reproductive harm. This appliance can cause low level exposure to some substances listed in the Act.

Precautions

If the unit is exposed to the following, do not operate heater until all corrective steps have been made by a qualified service agency.

- External fire
- Damage
- Running without water

IMPORTANT!

Before servicing this unit, verify that the power to the unit is turned off prior to opening the cabinet control door.

WARNING — **Contains Refrigerant!**

System contains oil and refrigerant under high pressure. Recover refrigerant to relieve pressure before opening the system. See unit rating label for refrigerant type. Do not use non-approved refrigerants, refrigerant substitutes, or refrigerant additives.
Failure to follow proper procedures or the use of non-approved refrigerants, refrigerant substitutes, or refrigerant additives could result in death or serious injury or equipment damage.

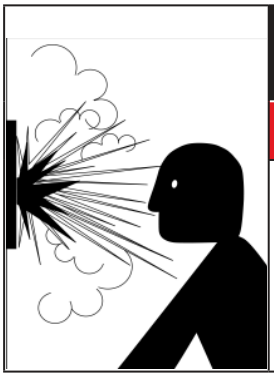

WARNING

Explosion Hazard!

- Do not use oxygen to purge or pressurize system for leak test
- Oxygen reacts violently with oil, which can cause an explosion resulting in severe personal injury or death

WARNING

Electrical Shock Hazard!

- Turn off power to the water heater before performing any service
- Label all wires prior to disconnecting when performing service. Wiring errors can cause improper and dangerous operation
- Failure to follow these instructions can result in personal injury or death

WARNING

Read and understand this instruction manual and the safety messages herein before installing, operating or servicing this water heater.
Failure to follow these instructions and safety messages could result in personal injury or death
This manual must remain with the water heater.

DANGER — **Burn Hazard!**

- Water temperature over 125°F (52°C) can cause severe burns instantly resulting in severe injury or death.
- Children, the elderly and the physically or mentally disabled are of highest risk for scald injury.
- Feel water before bathing or showering.
- Temperature limiting devices such as mixing valves must be installed when required by orders to ensure safe temperatures at fixtures.

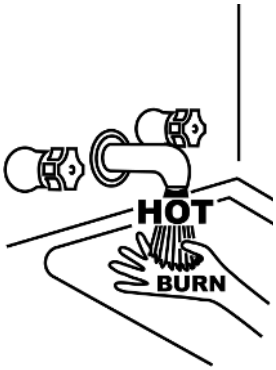

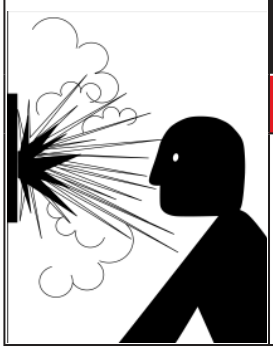

WARNING

Explosion Hazard!

- Overheated water can cause water tank explosion
- Properly sized temperature and pressure relief valve must be installed in the opening provided on connected storage tanks

Grounding Instructions

This heat pump water heater must be grounded in accordance with the National Electrical Code and/or local codes. These must be followed in all cases. Failure to ground this water heater properly may also cause erratic control system operation.

This heat pump water heater must be connected to a grounded metal, permanent wiring system; or an equipment grounding conductor must be run with the circuit conductors and connected to the equipment grounding terminal or lead on the water heater.

General Description

Purpose

C-Series air source units are air-to-water Commercial Heat Pump Water Heaters (CHPWHs) using R513A refrigerant in a closed and factory charged circuit. A double wall heat exchanger provides heat to a potable water circuit. Potable water is piped to the heat pump in a loop to and from external storage tanks. Circulation is provided by the integral circulator in the heat pump.

Usage

C-Series water heaters are designed to provide hot water in a “Single-pass” or a “Multi-pass” configuration, determined when the unit is ordered.

Single-pass means that water is delivered at full usable temperature to the top of a potable storage tank in one pass. This allows for faster recovery of usable water temperatures than in traditional “Multi-pass” configurations. This system is not an on demand heater and does require external and stratified storage to operate effectively. Building recirculation loops must be returned to a separate “swing tank” to preserve this stratification. Backup heat sources are traditionally integrated into the swing tank in these systems.

Multi-pass units do not require swing tanks, and recirculate water to and from primary storage, raising the water several degrees with each pass. This requires larger primary storage tanks but can be more appropriate in some retrofit applications, especially for part-load heat pump contributions, and situations with particularly high losses from recirculation loops

Flexible Installation

The enclosure is designed to minimize its footprint, and to simplify placement considerations for multiple-unit installations. As a “monobloc” style heat pump, the unit arrives ready to connect to electrical, condensate, optional ducting, and potable water infrastructure in the field. With a minimal top clearance requirement and short overall height, the C90A can also stack multiple units vertically with appropriate support.

It features on-board defrost heaters and heat tracing for cold weather usage, an integral circulator, a water temperature control valve, a double wall heat exchanger for direct pipe domestic hot water, and an internal condensate drain pan with a pipe connection point. The system is coated to resist salt spray corrosion for coastal environments.

While typically installed outdoors, interior locations with adequate and consistent ventilation or heat gain can also house the unit, such as large server rooms or parking garages. All C90A, R513A heat pumps can be ducted to the on-board high static blower fan discharge air connections, as well as to the duct collars on the intake air connections.

Controls and Electrical

The C-Series air source line is available in 208-230 and in 440-480 3-phase variants with a single point power connection. All R513A Nyle heat pumps feature an SCCR rating of 100.

All C-Series units are MODBUS and BACnet® capable using the “BMS Gateway” accessory option, ready to be integrated into BMS systems by 3rd party integrators using BACnet/IP and MSTP protocols.

All C-Series R513A units are certified to UL/CSA 60335-2-1 and -40.

For More Information

Please refer to the Performance Specifications for appropriate operating ranges and requirements. If more detailed information is required than is available in this manual, please contact Nyle Water Heating Systems for additional assistance.

Performance Specifications and Requirements

Table 1: C90A Performance Specifications

Unit Specifications	Single Pass	Multi Pass
Nominal Heating Capacity [1]	95,553 BTUs/hr	
Recovery Rate [2]	163 Gal/hr	
Ambient Operating Range	35–120°F	
Minimum Ambient Exposure	-13°F	
Hydronics		
Maximum Water Pressure	150 psig	
Water Outlet Operating Range [3]	100–155°F	
Water Inlet Operating Range	40–115°F	50–140°F
Design Domestic Water Flow Rate	11.0 GPM	19.0 GPM
Water Circuit Pressure Drop [4]	6.85 ft hd	10.1 ft hd
Heat Pump Cv Value [4]	6.0	9.0
External Head Allowance [5]	10.8 ft hd	12.2 ft hd
Min. Cold Cycle Volume [6]	58 Gal.	60 Gal.
Min. Warm Cycle Volume [7]	N/A	169 Gal.
Min. Tank Volume [8]	N/A	750
Airflow		
Air Flow Rate	3,600 CFM	
External Static Pressure for Ducting	0.94 in wcg	
Miscellaneous		
Standard Sound Rating [9]	74.1 dB (Front) / 67.8 dB (Left) / 67.9 dB (Right) / 71.5 dB (Rear)	
Certifications	UL60335-1, UL60335-2-40, CSA C22.2 60335-1, CSA 60335-2-40 (LC16116-1)	

Notes:

1. Nominal heating performance is outdoor air at 50% RH, 80.6 degree F., 140 degree F. LWT and 50 degree F. EWT.
2. Recovery Rate is at nominal heating performance condition producing 120 degree water.
3. Maximum LWT not available at all ambient conditions. See Diagram 1: Maximum LWT on page 8.
4. Heat Pump pressure drop and Cv values are for external pump applications at design flow rate.
5. Piping pressure drop allowed by integral circulator in the heat pump.
6. Cold Cycle volume is the volume below the cold trigger sensor. Cold in water over 70 degree F. will need more volume.
7. Warm Cycle volume is the volume of water below the warm/recirc trigger sensor.
8. Tank volume is based on individual project demands, but cannot be lower than this minimum value in any case.
9. Sound Pressure measured 3' away 3' from ground.

Note: C-Series R513A heat pumps will suspend operation when ambient conditions drop below their stated minimums. Single-pass heat pumps may limit their outgoing water temperature in lower ambient conditions. See the Maximum LWT diagram for details.

Expanded Performance Data

Table 2: C90A Expanded Performance: (50° EWT, 140° LWT, 50% RH)

Ambient Air Condition	Supply Heating Capacity (Btu/hr)	Air Cooling Capacity (Btu/hr)	Power Input (kW)	Heating COP	Cooling COP	Combined COP
90°F	100,500	68,768	9.3	3.2	2.2	5.3
80°F	90,200	58,639	9.3	2.9	1.9	4.7
70°F	80,000	48,610	9.2	2.5	1.5	4.1
60°F	71,900	41,021	9.1	2.3	1.3	3.7
50°F	63,900	33,533	8.9	2.1	1.1	3.2
40°F	57,000	26,292	9.0	1.9	0.9	2.7

Diagram 1: Maximum Single-pass LWT by Ambient Air Temp

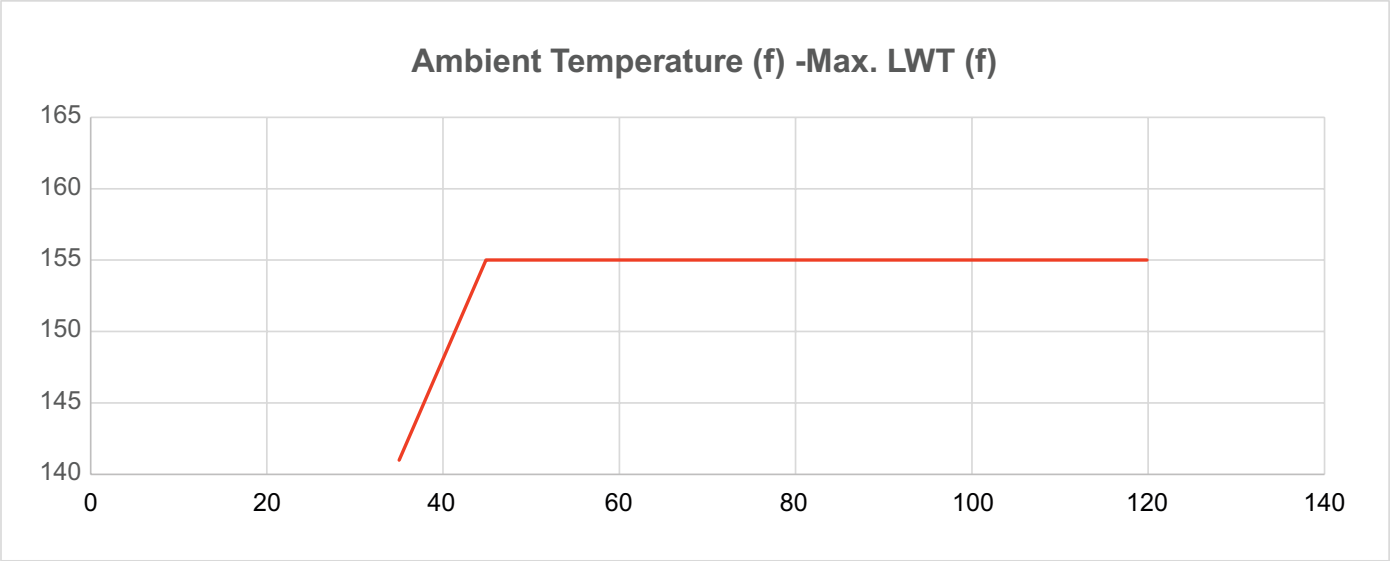

Note: If a single-pass heat pump is set to target a LWT too high for current ambient conditions, it will automatically limit LWT according to this diagram until ambient conditions rise.

Electrical Specifications

Table 3: C90A Electrical Specifications

Electrical Specifications	Single-pass		Multi-pass	
Main Power Input	208-230/3/60	460/3/60	208-230/3/60	460/3/60
Minimum Circuit Ampacity (MCA)	53	27	57	29
Maximum Overcurrent Protection (MOCP)	90	50	100	50
Rated Load Amps (RLA)	43	22	47	24
Short Circuit Current Rating (SCCR)	100	100	100	100
Internal Component Data				
Compressor Locked Rotor Amps (LRA)	239	125	239	125
Compressor Horsepower (HP)	10	10	10	10

Sound Pressure Data

Table 4: C90A Sound Pressure Data

	Leq	1:1 Octave									
	LAeq (dBA)	31.5 Hz (dB)	63 Hz (dB)	125 Hz (dB)	250 Hz (dB)	500 Hz (dB)	1 kHz (dB)	2 kHz (dB)	4 kHz (dB)	8 kHz (dB)	16 kHz (dB)
Front	74.1	66.1	74	71.3	71.3	70	67.8	67.9	65.6	58.1	45.1
Left	67.8	64.8	66.2	66.9	64.8	63.5	64.1	60.7	55.5	44.7	32
Right	67.9	63.7	69.3	67.1	64.4	63.4	63.7	61.4	55.9	46.4	33.2
Rear	71.5	68.5	73.7	71.3	69.2	67.2	68	63.8	57.7	48.2	35.9

Physical Specifications and Clearances

Table 5: C90A Physical Specifications

Physical Specifications	
Water Side Pipe Connections (FPT)	1-1/2"
Condensate Pipe Connection (MPT)	1"
Internal Water Volume (Gallons)	1.8
Dimensions (Inches)	79" L x 33-3/4" D x 43-3/4" H
Weight (Pounds)	795 Dry / 809 Operating
Compressor Type	Scroll
Refrigerant	R513A
Factory Charge (Pounds)	21
Oil Charge (Initial / Recharge) (Ounces)	114 / 110
Salt Spray Resistance Cabinet / Evap (Hours)	1000

Figure 1: Single Unit Clearances

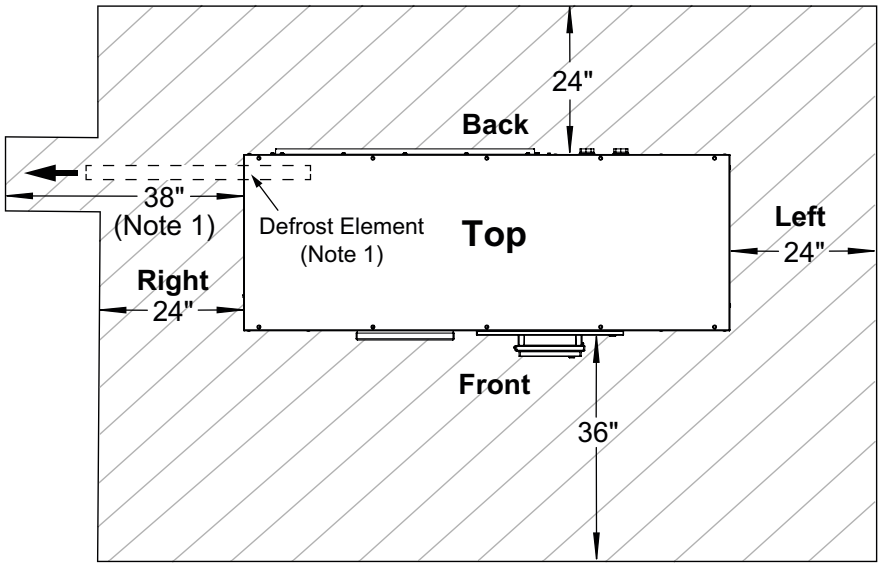

Clearance Notes: (All Tolerances +/- 1/8")

1. Defrost elements will require a minimum 38" right side clearance to replace in place. Provisions to disconnect and move the unit are a suitable option in the event of this rare service requirement.
2. For side by side installations, units mounted to the left of an adjacent unit can be set forward 3" to leave pull clearance for the adjacent heat pump. See Figure 3, on page 10.
3. Bottom clearance to the ground varies by project requirements, and is primarily driven by the height required to properly pitch condensate piping to drain. Free discharge (unpiped) condensate applications are not generally recommended. See "Water and Condensate Piping" section for more information about piped and free discharge condensate applications. Nyle recommends a minimum of 6" of bottom clearance to access the condensate drain pipe tapping. This could be reduced by pre-installing the condensate pipe connection, or, for some piping and/or attachment methods.
4. If vibration transmission and/or seismic activity is a concern for your installation, account for the additional height of vibration isolation or seismic measures as recommended by a qualified engineer.

Figure 2: Back to Back Units Clearances

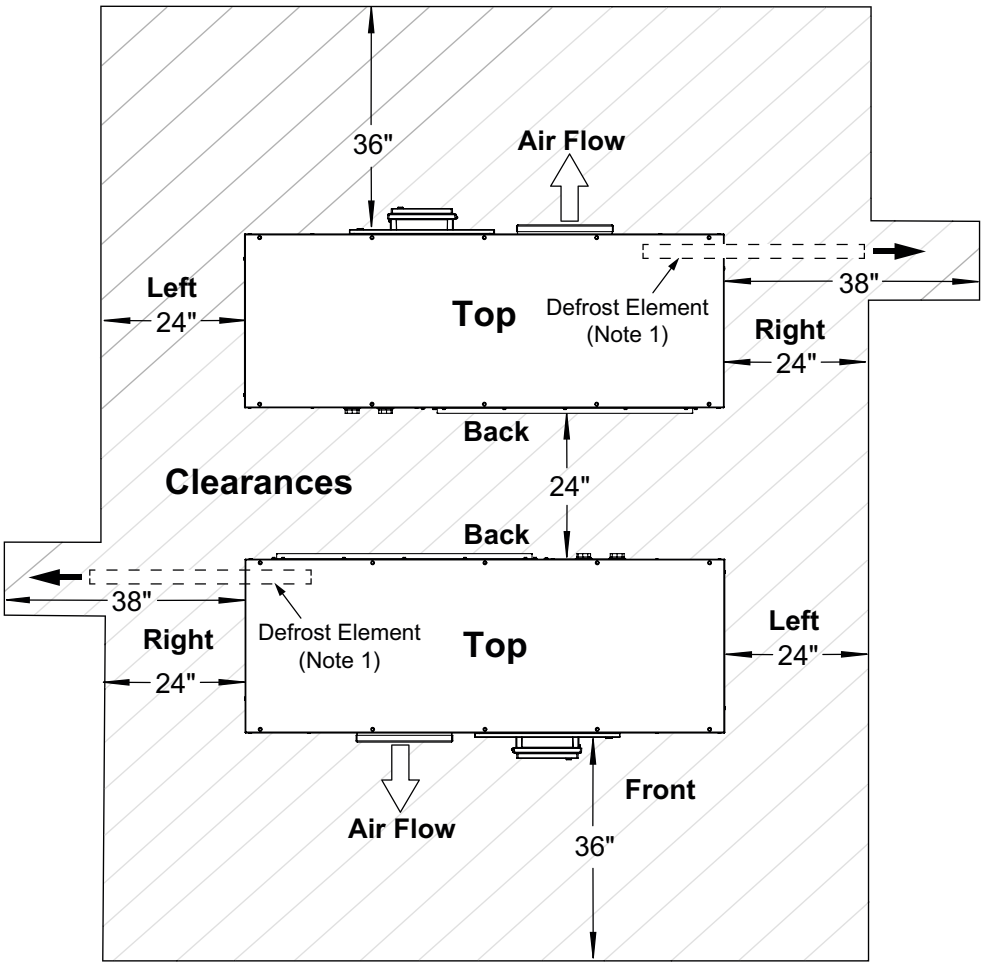

Figure 3: Side by Side Units Clearances

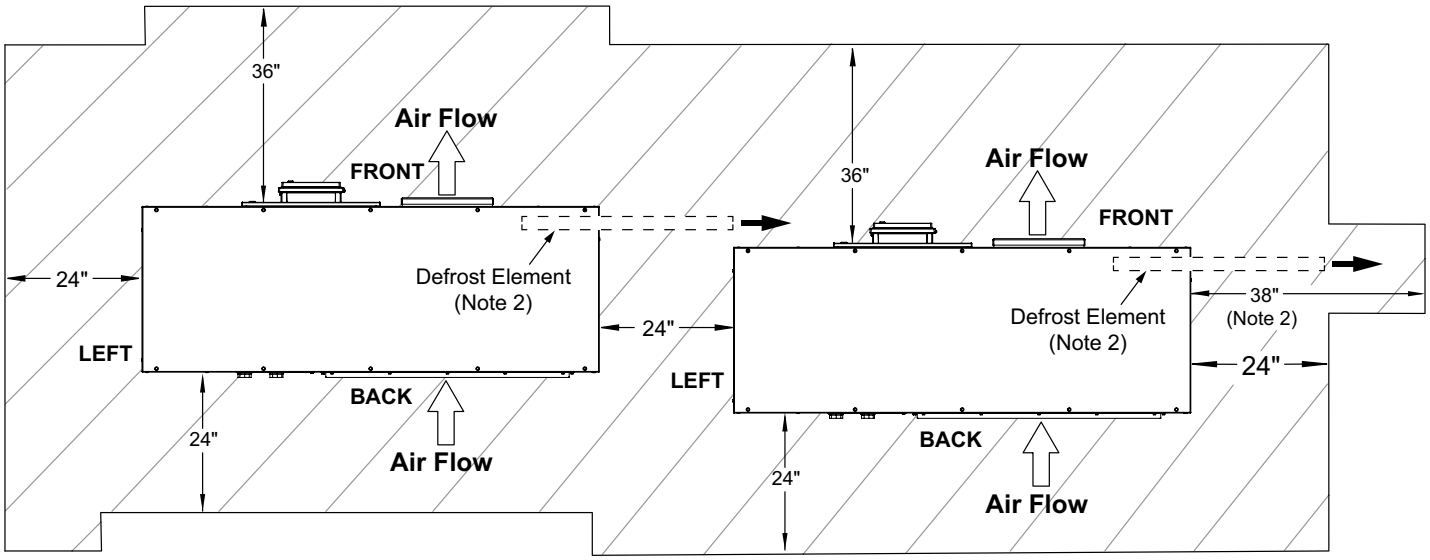

Dimensions

Figure 4: C90A Dimensions

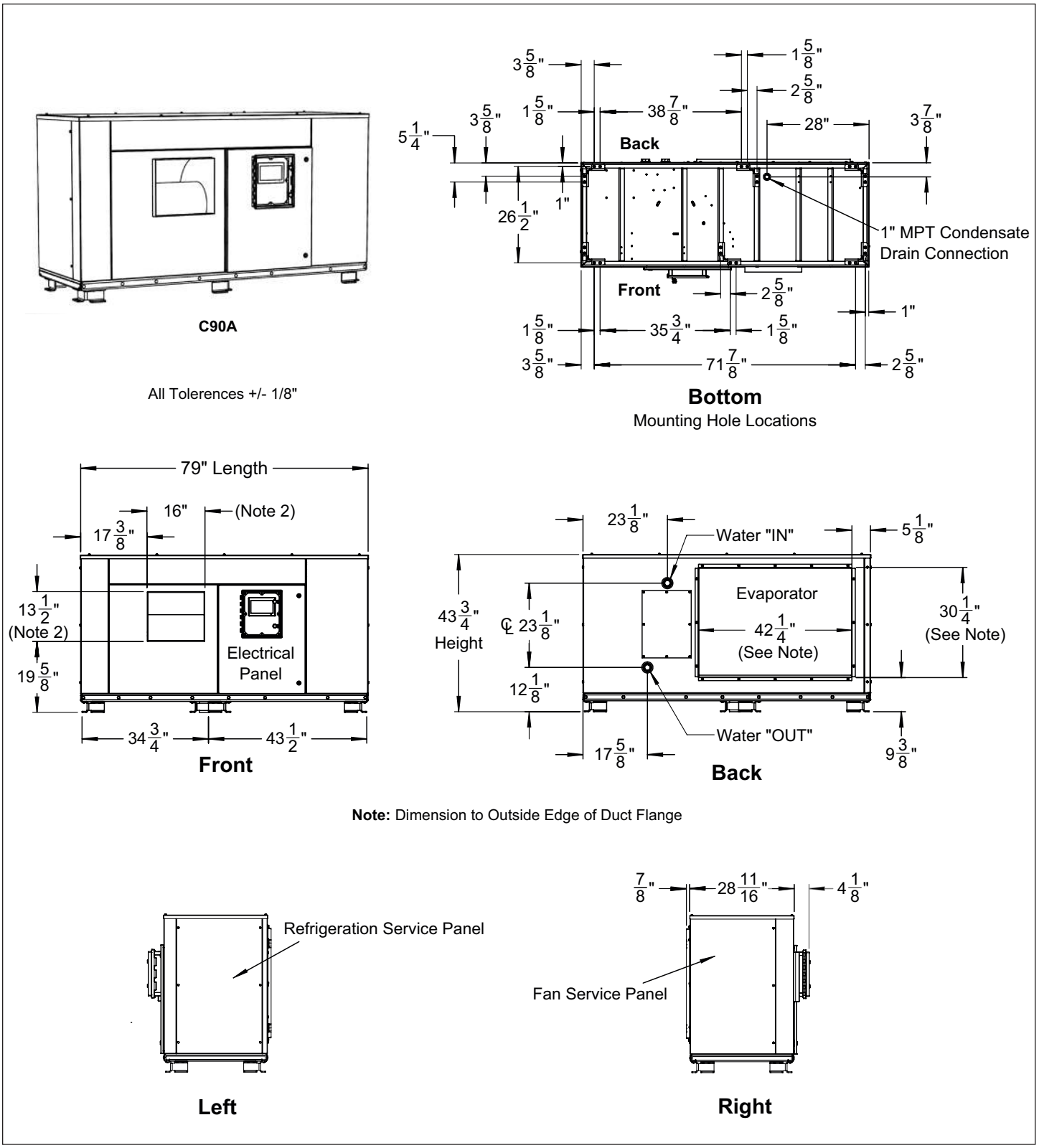

Before Ordering Your Heat Pump

Nyle Water Heating Systems recommends following this pre-order checklist, to minimize the chances of costly mistakes and potentially lengthy project delays:

- ☐ Be sure to thoroughly review this manual and familiarize yourself with the equipment's installation requirements. The manual has been organized to follow the general sequence of most installations. **If any details are not clear or questions are not answered contact your Nyle representative to resolve them ahead of time.**
- ☐ **Review performance specifications** against your intended installed environment and water temperature requirements, and ensure the unit will perform appropriately for your conditions.
- ☐ **Review physical specifications** to ensure the unit will have adequate installation space, support, clearances, drainage support, and airflow. Familiarize yourself with piping, condensate, wiring, and ducting connections to ensure all attached infrastructure will be able to access the unit. Remember additional installation height may be needed for condensate drain pitch requirements.
- ☐ **Evaluate the need for backup heat production, especially in cold climates.** R513A C-Series air source units will stop operating completely below their rated ambient range.
- ☐ **Ensure freeze protection is addressed.** Attached piping may need its own frost protection, and backup power may be needed if the unit will be exposed to freezing conditions, to keep freeze protection active during a power outage.
- ☐ Be clear on your plan to deliver, transport, mount, and secure the unit.
- ☐ Double check the voltage requirements of the unit you intend to order, to make sure it is compatible with the available voltage on site.
- ☐ Double check the intended piping configuration for your project (Single-pass or Multi-pass) and ensure you are ordering the correct model for your application.
- ☐ Air to Water heat pumps are multidisciplinary installations that may require any or all of the following trade specialties to support: **site prep/structural, electrical, plumbing, ducting, automation/controls, refrigeration, and duct/piping insulation.** Be sure that various specialties involved in your project are well informed as to their role in the installation and are properly certified and qualified in their specialties in accordance with all governing codes and regulations.
- ☐ Be sure that qualified refrigeration technicians are available for installation troubleshooting support and ongoing system maintenance. If this is in question, contact your local Nyle representative to discuss support options.

Cold Climate Installation Considerations

C-Series heat pumps are NOT intended to operate in cold climates. However, freeze protection is an important part of the installation and design planning for all installations, even in warm climates, as long as any potential for freezing conditions exists. Air source C-Series heat pumps will stop operating at temperatures above freezing, regardless of options installed.

One option is to install the unit in freeze protected spaces and duct them to the outside, using the blower fan option. See "Optional Ducting and Ventilation" on page 26 for details. For exterior installations, additional measures are required.

CAUTION

Cold climate outdoor installations require close attention to the following considerations. Failure to address freezing issues can result in equipment failure and/or severe water damage to the property.

Considerations for Exterior Applications in Cold Climates

1. All water and condensate piping that may be exposed to freezing temperatures must be insulated and heat traced as per local code and/or heat tracing manufacturer's requirements. It is recommended that this tracing be thermostatically activated to run as needed, not always on. Self regulating cable is recommended.
2. If freezing conditions are possible, backup power is necessary to ensure freeze protection remains active during power outages, or the units will need to be manually drained if a power outage occurs in freezing conditions.
3. In the case of an emergency drain down, units will need to be blown out with compressed air. Exterior piping should pitch toward a drain point to facilitate clearing attached pipes of water.
4. Condensate should not be produced during freezing conditions, as the unit should not be running. However, traps or obstructions in condensate pipes could hold water that could freeze. If freezing conditions are possible, condensate piping should be heat traced.

Unit Diagram and Key Components

Figure 5: C90A Model

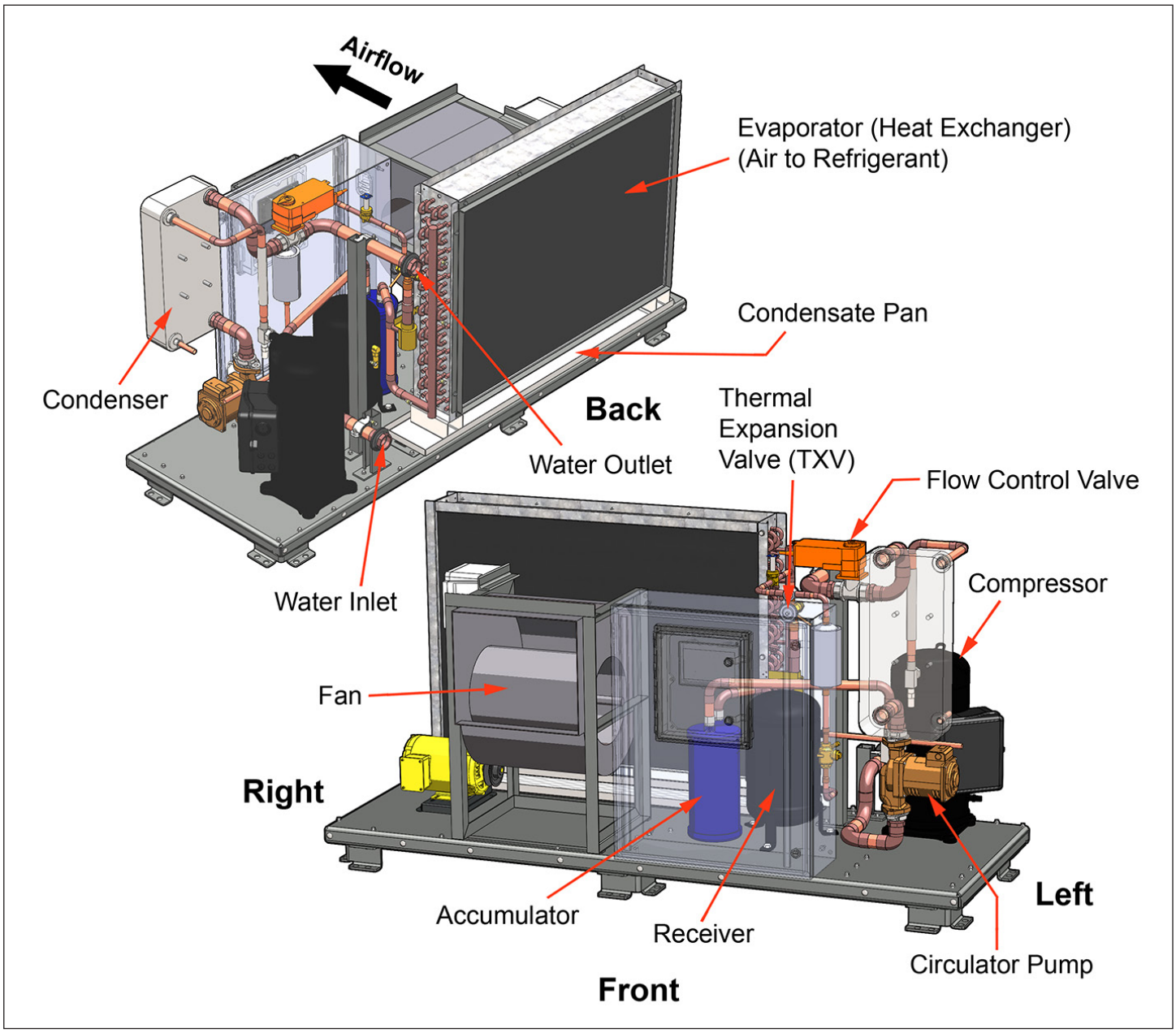

Heat Pump Installation

Required Tools and Materials

In addition to all standard tools and material required for any electrical or plumbing installation, some of the other specialty tools required to support this installation include:

1. Heat transfer compound such as Honeywell part number 107408 or equivalent.
2. Electrical switch lock out devices - used to secure disconnect switches/breaker panels while servicing.
3. Electronic thermometer with range of 10°F - 210°F (-12°C - 100°C) including:
   - Sensors capable of measuring surface temperatures on water or refrigerant piping
   - Sensors capable of measuring ambient air temperature
4. Volt-Ohm Multimeter - capable of measuring:
   - AC Voltage up to 600 VAC
   - DC Voltage up to 24 VDC
   - Ohms up to 2,000,000 ohms
   - Continuity
   - Amperage up to 200 amps
5. Anemometer or other airflow measuring device.
6. Magnahelic or other pressure measuring device capable of reading 0.1" to 2.0" w.c.g.

Rough-In Checklist

Infrastructure must sometimes be installed prior to the installation of the unit. Items to consider for “Rough-In” installation include:

- ☐ Potable water pipes to and from storage tanks, including pipe insulation and heat tracing as necessary.
- ☐ Primary power wiring.
- ☐ Condensate drain lines, including pipe insulation and heat tracing as necessary.
- ☐ Ducting to or from remote locations, including insulation as necessary.
- ☐ Control wiring for alarms, BMS interface, and external accessories. Nyle recommends running a minimum of one 18/12 control wire and a CAT-5e/6 wire to ensure that all likely accessories and control functions can be utilized.
- ☐ Site prep for mounting the heat pump.

Note: Refer to the appropriate sections of this manual for the specific details associated with each item.

Transportation, Placement, Mounting

IMPORTANT!

Do not remove, cover, or deface any permanent instructions, wiring diagrams, labels, or the rating labels present on the unit. These are important for installation and service.

When Transporting the Heat Pump

1. Review the physical specifications of your heat pump to ensure equipment used and delivery route is appropriate for the size and weight of the unit.
2. Do not tilt the unit beyond 45 degrees at any time.
3. Do not hoist the unit with chains or straps unless spreader bars are furnished and used as depicted in Figure 6. The side panels and roof of the unit are not constructed to handle significant force from the sides or above. Follow all standards and best practices for hoisting and load stabilization.
4. When using a forklift to raise or move the heat pump, take care not to damage the feet on the unit. Follow all standards and best practices for lifting and load stabilization.

Figure 6: Rigging and Hoisting Unit

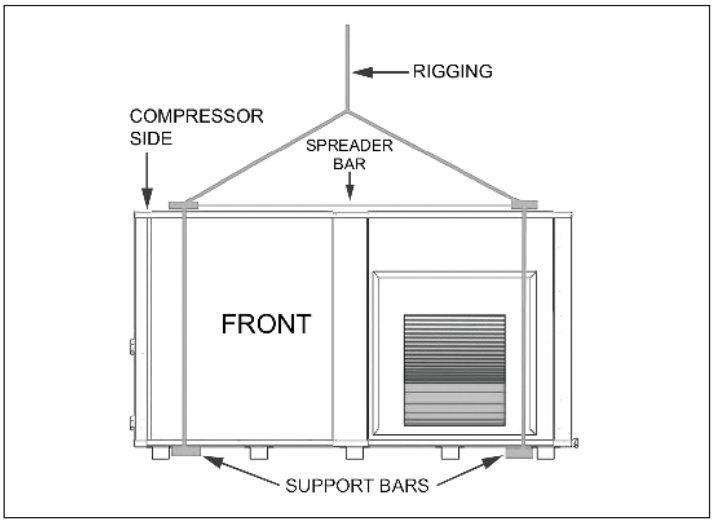

Figure 7: Rigging and Hoisting Unit - Side View

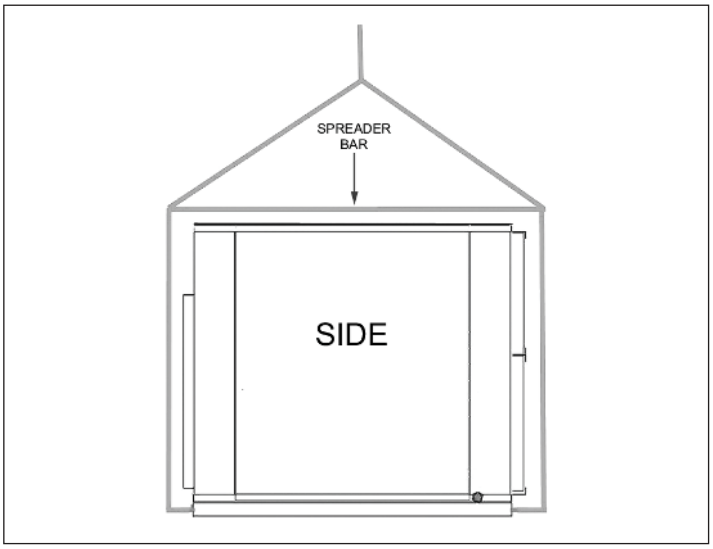

Figure 8: Lifting and Moving Unit with Forklift

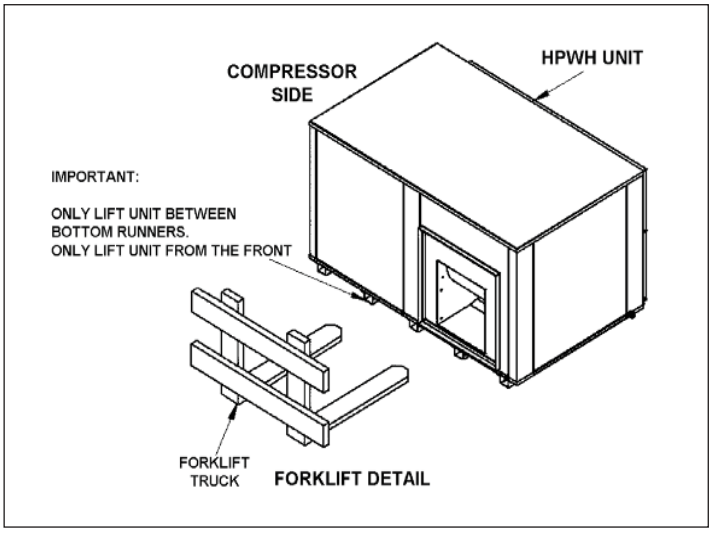

Placement Considerations for the Heat Pump

1. Ensure the location meets all requirements for ambient temperature, structural support, unit dimensions, operational and service clearances. Refer to "Performance Specifications and Requirements" on page 7.
2. Mounting location must be level and stable.
3. Unit location should be easily accessible for visual inspection and for regular service. Placement should allow for possible heat pump removal/replacement in the future.
4. Unit location should be as close as possible to conditioned space to allow for the minimum piping and heat tracing possible in exterior environments, and as close as possible to condensate drainage points, hot water storage tanks, cold water source, and any air intake/discharge locations.
5. Unit location should minimize the risk of water damage in the event of leaks or drainage failure.
6. Unit should be mounted high enough to ensure condensate piping pitch to a remote drain point, or to a condensate pump in conditioned space for further handling.
7. Location of unit should be determined with consideration of operating sound and potential vibration on the surroundings and to avoid these impacts where possible.
8. Location should provide adequate protection to the unit from vehicles, plows, falling objects, or other potential sources of damage.
9. If unit location is indoors, ensure adequate ventilation or internal heat gain is present to allow for unit operation, and/or that optional ducting is installed.

Mounting the Heat Pump

The heat pump must be mounted on a solid, level base, typically a concrete pad. Unit should be bolted securely to the base using the supplied attachment points. If the base is not level, then the heat pump itself must be leveled to ensure proper condensate drainage and mounting stability.

Mounting the unit on elevated rails is also possible. Complete structural requirements for rails are beyond the scope of this manual: however, required rail positions and minimum rail widths are specified in Figure 9 on page 16, which will properly support the internal structure of the heat pump.

Seismic Mounting

Local area seismic or vibration considerations should be addressed with field supplied, additional equipment as per applicable codes, regulations, and best practice. Seismic mounts and vibration control measures should be evaluated and determined by a qualified engineer.

CAUTION

After placing the heat pump, ensure that the unit is level front to rear and side to side. Units that are not level will not drain properly, and may vibrate excessively.

Figure 9: C90A Mounting Rails Positions and Widths

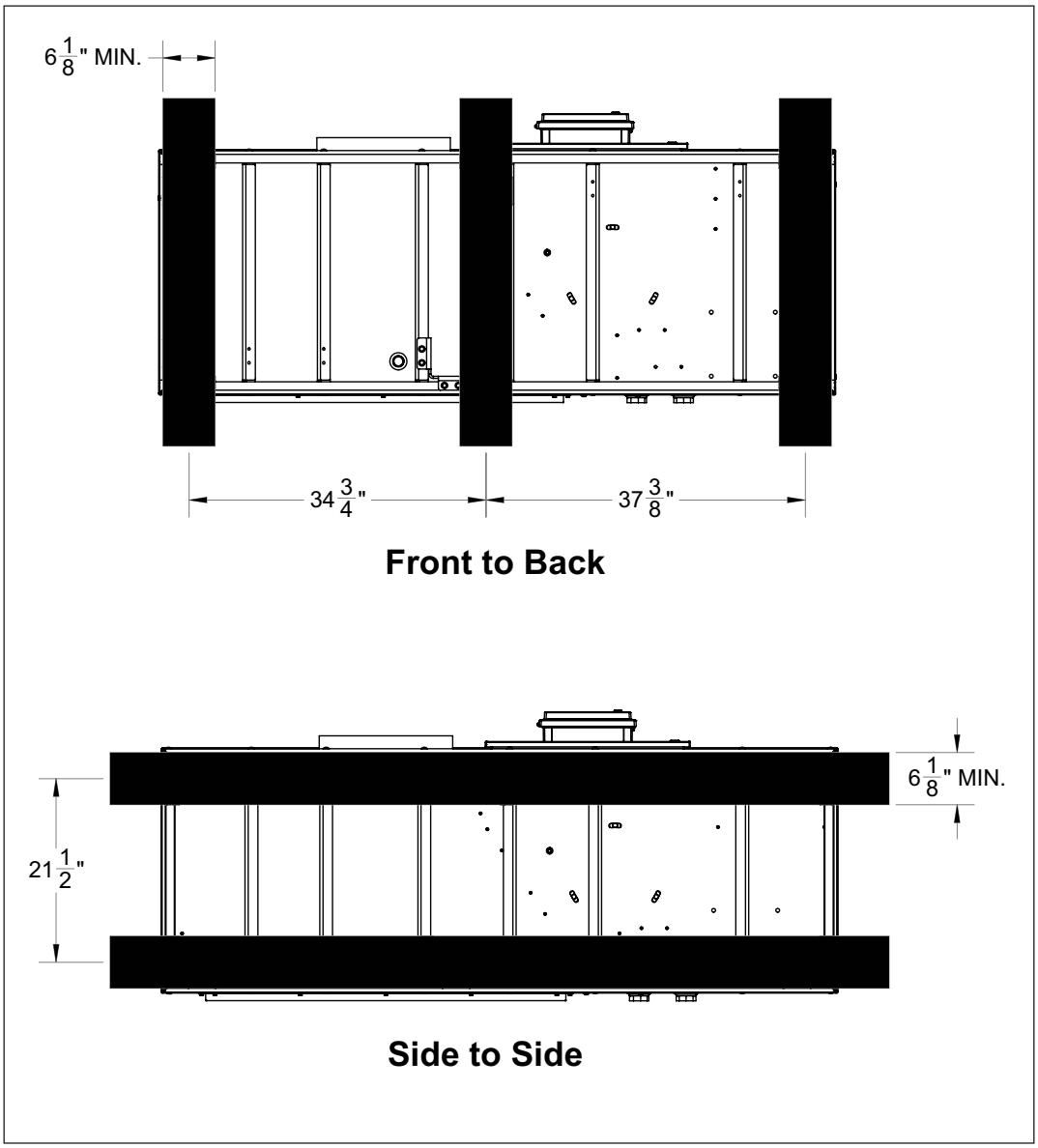

Water Quality

Water quality is an important concern for human health and well being. Ensure source supply water is clean and meets all applicable standards for potable water consumption. In addition, water quality can affect longevity and performance of the heat pump water heater system. Ensure system water meets, or is treated to meet, the specifications in the table of water quality guidelines in this manual.

CAUTION

All information in this manual is superseded by all applicable local codes and regulations. Where codes and guidance from Nyle are in conflict, advise Nyle or your local manufacturer's representative of the conflict.

Table 6: Water Quality Specifications

	MG/l or ppm
Alkalinity	70-300
Sulfate	<70
HCO3/SO4	>1
Conductivity	10-500 µS/cm
pH	7.5-10
Ammonium	<2
Chlorides	<100
Free Chlorine	<1
Hydrogen Sulfide	<0.05
Free CO2	<5
Total Hardness	60-120
Nitrate	<100
Iron	<0.2
Aluminum	<0.2
Manganese	<0.1

⚠ CAUTION

Components and Water Circuit Additives:
Use only components and joining methods suitable for potable water usage and suitable for temperatures in excess of 160 degrees Fahrenheit on the water piping circuit. Only pure water or food grade additives should ever be used within the water circuit on the heat pump. Any other additives or contaminants in the water circuit can render it unusable for potable water heating.

Water Piping

CAUTION

Check Valves:
All C-series heat pumps have internal control valves that can be configured to be open or closed when the unit is off. External check valves are not necessary on heat pump piping. Single-pass units, which can modulate flow to very flow velocities, CAN NOT use check valves on the heat pump supply or return piping.

Pipe Sizing and Care:
All connected piping must be sized for the design flow rates, appropriate velocity, and available head pressure for the heat pump in use. Refer to the performance specifications for this information. Ensure that pipes are clean and protected from intrusion of dirt or other contaminants during the installation.

Pressure Testing and Purging:
All connected pipes and components should be pressure tested with air before filling with water. A thorough fill and purge process is required to remove any air bubbles from the lines BEFORE starting up the unit. Failure to purge piping of air bubbles can damage the internal circulator. Install purge valves in the connected piping to facilitate this process.

Tank Selection:
Temperature stratification is necessary to the proper operation of Single-pass systems, and usable volume is very important for Multi-pass systems. To ensure optimal system operation, vertical tanks are preferred for commercial heat pump domestic water heating systems, as they typically maintain usable volumes and stratification better than horizontal tanks

⚠ WARNING

Expansion:
All hot water systems require accommodation for fluid expansion when heated. Ensure that expansion devices such as expansion tanks or compression tanks are specified and sized by a qualified engineer. T&P Valves are required on primary storage tanks and should be sized for the total maximum BTU capacity of all attached heat sources. Failure to properly accommodate expansion can result in equipment failure, nuisance callbacks, injury, or death.

Water Temperature Control
Commercial water heating is typically done at storage temperatures that are dangerous for human contact. Nyle recommends all water heating systems install mechanical temperature limiting devices, such as tempering valves, between storage volumes and the building's plumbing fixtures. Failure to provide these safety devices can result in scalding injuries or death.

Piping Considerations

C-Series heat pump water heaters are designed to be piped to tank water storage in either a “Single-pass” configuration or a “Multi-pass” configuration, depending on the unit that was ordered. **These units significantly differ in their operation and are not interchangeable!** Be sure of your operation methods before ordering your heat pump.

Heat pump water heaters ALWAYS require storage tanks, and are not instantaneous water heaters.

Typical Water Piping Process

1. Rough-in any pipe/insulation/heat trace in areas that will not be accessible or traversable during the final installation.
2. Installation of all water piping and components.
3. Pressure testing the water side components with air to a pressure less than 150 PSI or the pressure rating on the storage tank pressure relief valves. Nyle recommends testing to 80-100 PSI or 1.25x the standing pressure of the system, whichever is higher, for a minimum of two continuous hours.
4. Find and rectify any leaks.
5. Install heat tracing and pipe insulation after the piping is determined airtight. Note this may require a standalone pressure test of rough-in piping so insulation and heat tracing can rough-in with the pipes.
6. Isolate the building piping from the heat pumps and storage, then use purge valves to fill the heat pump and storage system.
7. Purge lines by continuing to fill through isolated flow paths until fill water exits a far point drain valve in a clean and continuous stream without stuttering or foaming.
8. After the system has operated for 24 hours including several heat/cool cycles of the heat pump, a final check for water leaks should be performed.

Examples of typical recommended water side piping are shown for reference in Diagram 2 on page 19 and in Diagram 3 on page 20.

If piping extends below storage tank drain points, install additional drain points at the lowest points on the piping.

Single-pass with Swing in Series Piping

Single-pass units deliver water at a variable flow rate, at a fixed temperature, to the top of a stratified temperature storage tank. Water is pulled from the cold, bottom portion of the tank. Flow rates through the heat pump will vary depending on inlet water temperature, outlet target water temperature, and ambient temperature.

In order to maintain stratification in the primary storage tank, as well as minimum temperature rise requirements at the heat pump, circulating loops from other sources, such as building recirculation loops or boiler backup heat, must be handled with a separate “swing tank”, which is fed by the heat pump storage tank in series during domestic hot water demands. It is important that recirculation loops are NOT returned to the primary storage in single-pass systems!

The swing tank is heated by a secondary heat source to handle recirculation losses when demands are not present, and can provide a convenient way to provide backup heat to the system as well. Swing tanks are typically kept at a slightly lower temperature than the primary storage, to maximize the contribution of the heat pump to overall energy demand.

These systems feature the smallest storage and heat pump capacity requirements, and are typically the most efficient method as well.

Diagram 2: Single-pass with Swing in Series Piping Concept

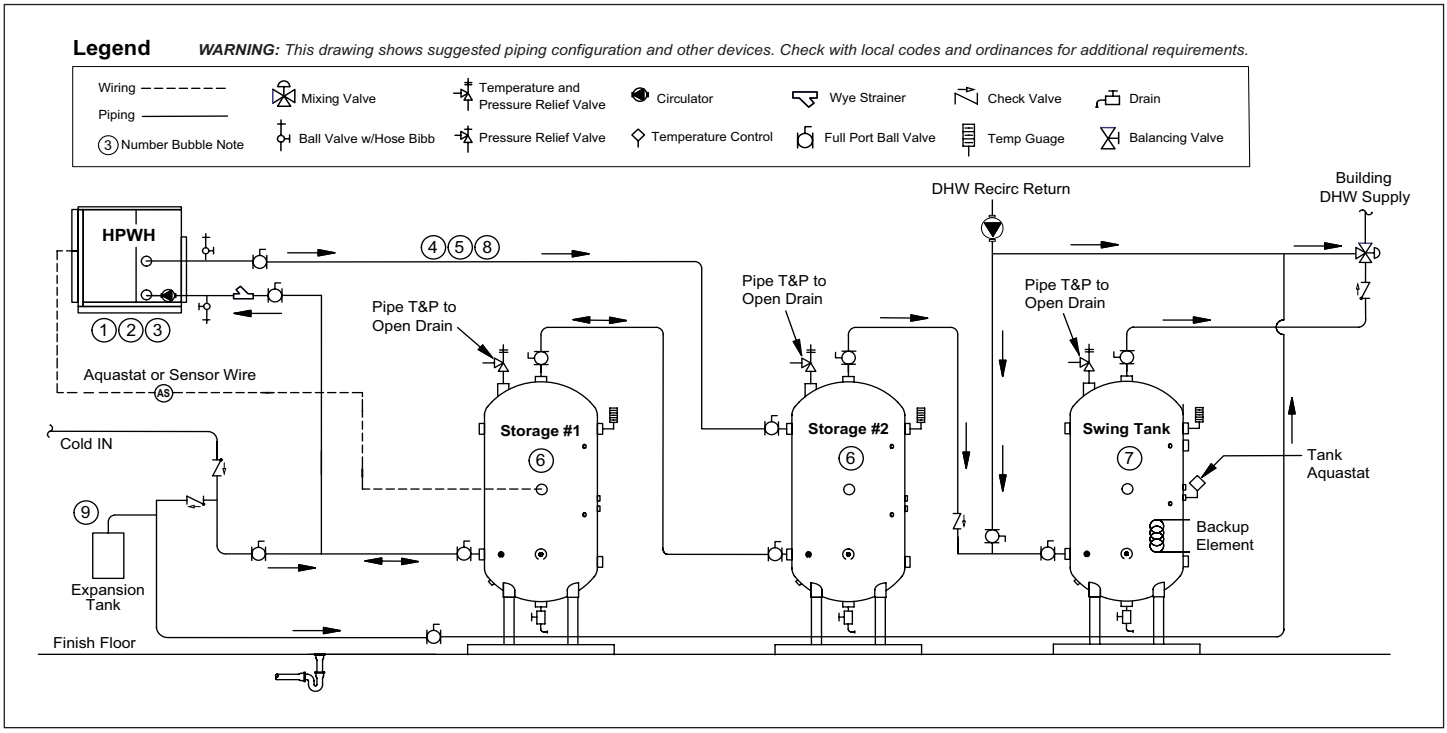

Single-pass Piping Notes:

1. Exterior water piping requires insulation in all cases. Heat Tracing is required on all pipes that could be exposed to freezing conditions. UV jacketing is recommended for pipes exposed to sunlight. Insulate as per applicable energy codes, ambient conditions, and heat trace mfg requirements.
2. Slope exterior run pipes down toward a drain location. This allows manual draining of exterior lines in an emergency.
3. Condensate piping must be heat traced and insulated in all cases where piping could be exposed to freezing conditions. Pitch to freeze protected drain point or to condensate pump.
4. All piping between heat pump and storage should be sized for appropriate pressure drops and velocities. Refer to performance specifications for available pressure and flow rate requirements.
5. Pump circulation between heat pump and storage tanks is required as a part of freeze protection in some conditions. Any external solenoids or zone valves must be interlocked with the unit to open when the pump is triggered.
6. Ensure storage and/or swing tanks are rated for potable usage, have adequate volume for the design, have tappings at required locations, and are approved to handle system flow rates without fitting erosion.
7. Swing tank must have backup heat installed sufficient to cover at least the recirc system heat losses. Backup heat can be installed in the tank itself, or piped to it from an external heater.
8. Air venting is recommended at the high point of the hot water supply piping from the water heater. Use only air vents suitable for open systems. Ensure the air vent installed is appropriate for its ambient conditions.
9. Expansion tank must have a direct pipe run with no opposing check valve to the swing tank in single -pass

Multi-pass Piping

Multi-pass units deliver water at a fixed flow rate, at a variable temperature, with leaving water temps several degrees higher than incoming water temp. These systems do not consistently stratify their tanks, and water is taken from the colder bottom portion and returned slightly higher in the tank, similar to traditional boiler-driven systems.

Multi-pass systems do not require swing tanks, and building recirc will typically return directly to the primary storage tanks.

They require significantly more storage and heat pump capacity than single-pass systems, but can be more efficient for systems with large recirc loads that would otherwise require larger backup boilers or electric resistance heating. Also, if using undersized heat pump contributions, this method allows the heat pump to run with an additional backup source at the same time quite easily.

Multi-pass heat pumps can also be used to heat swing tanks, instead of electric resistance or fossil fuel backup.

Diagram 3: Multi-pass Piping Concept

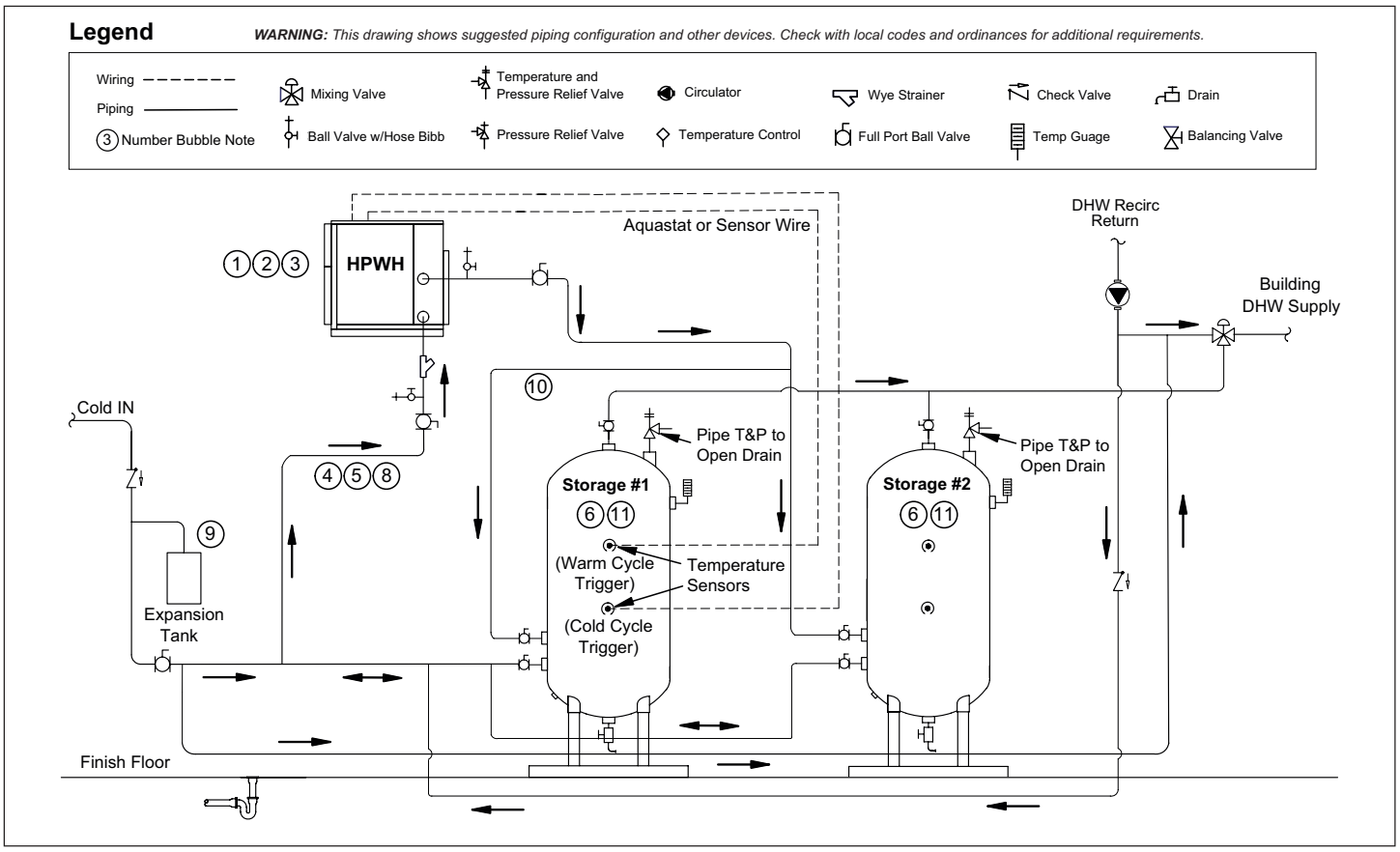

Multi-pass Piping Notes:

1. Exterior water piping requires insulation in all cases. Heat Tracing is required on all pipes that could be exposed to freezing conditions. UV jacketing is recommended for pipes exposed to sunlight. Insulate as per applicable energy codes, ambient conditions, and heat trace mfg requirements.
2. Slope exterior run pipes down toward a drain location. This allows manual draining of exterior lines in an emergency.
3. Condensate piping must be heat traced and insulated in all cases where piping could be exposed to freezing conditions. Pitch to freeze protected drain point or to condensate pump.
4. All piping between heat pump and storage should be sized for appropriate pressure drops and velocities. Refer to performance specifications for available pressure and flow rate requirements.
5. Pump circulation between heat pump and storage tanks is required as a part of freeze protection in some conditions. Any external solenoids or zone valves must be interlocked with the unit to open when the pump is triggered.
6. Ensure storage and/or swing tanks are rated for potable usage, have adequate volume for the design, have tappings at required locations, and are approved to handle system flow rates without fitting erosion.
8. Air venting is recommended at the high point of the hot water supply piping from the water heater. Use only air vents suitable for open systems. Ensure the air vent is installed in an interior, protected space.
9. Expansion tank must have a direct pipe run with no opposing check valve to the primary storage in multi-pass.
10. Multiple storage tanks must be piped reverse-return: first in, last out, with equal branch runs to all units off of a common header with consistent pipe sizing. Do not step down the header pipe after the first tank takeoff. Balancing and isolation valves are also required.
11. If multiple tanks are used, a single temp sensor can pick any tank to trigger heating operation. However, the master control accessory can be used to add additional tank sensors, which is more ideal for multiple, multi-pass tanks.

Condensate Piping

Commercial heat pump water heaters can produce large amounts of condensate during warmer weather; in colder weather they will also create condensation runoff during the defrost cycle. C-Series units do not run in freezing conditions, so considerations for freezing conditions are typically limited to any risk of standing water in pipes, such as in traps or sags in piping.

A drain pan is installed under the evaporator coil. The pan includes a connection point for exterior condensate piping.

⚠ CAUTION

Nyle recommends all condensate lines be piped to a drain. Failure to control condensate can result in slip/fall conditions, site erosion, water damage, and/or damage to the heat pump water heater itself; which can include complete unit failure not covered by warranty. While unpiped applications are possible, they would need to be able to safely accommodate significant and sustained condensate production, especially in humid climates.

Condensate Piping Requirements

1. At least 1/4" pitch per linear foot toward drain or freeze protected condensate pump.
2. Minimum 3/4" pipe size.
3. Insulation and heat tracing on all piping exposed to freezing temperatures.
4. All condensate pipes should include a trap with at least 3" standing water height.
5. All traps require a vent immediately downstream from the trap. Vents should extend to a point higher than the drain pan of the heat pump. Vents must be in a freeze protected space.
6. Condensate pumps require their own trap and vent piping, and an indirect piping connection from the heat pump condensate discharge pipe. Vent pipes need to terminate higher than the condensate pump.
7. Any drain connection to septic requires an indirect connection and trap. Pay special attention to all local codes and ordinances if connecting to septic.
8. When multiple units are connected to the same condensate piping, Nyle recommends the use of isolation valves to allow blowing out of individual lines when necessary.

Figure 10: Condensate Piping Detail

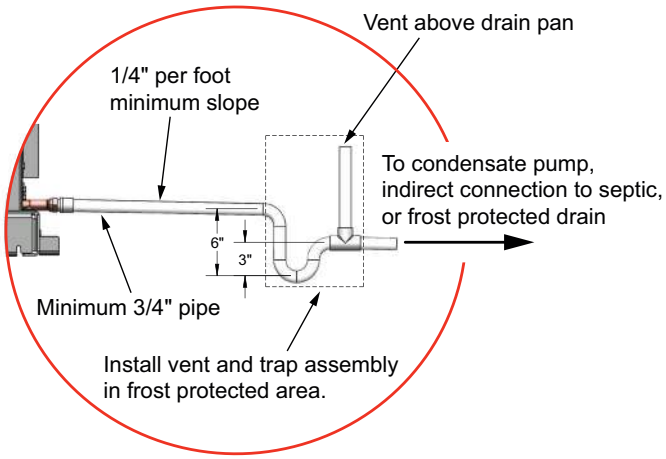

Note: Insulation and heat trace required in freezing climates.

Power Wiring

⚠ WARNING

Improper handling of unit electrical power can result in immediate equipment damage, fires, injury, and death. Ensure only qualified personnel interact with main power lines. Never work while power is live; use all possible safety precautions and perform all work in accordance with appropriate local codes, National Electric Code, and/or CSA regulations.

Heat pump water heaters are voltage-specific, and require proper planning to provide the electrical support appropriate to each unit. Refer to Table 3 on page 8, specific product submittals, project documentation and requirements, and the following installation instructions.

Power Requirements

1. Voltage is correct to within +/- 5% of ratings and within +/-2% between phases.
2. Power is clean, reliable, and well grounded.
3. Wire and breakers are appropriately sized for the load and equal to or larger than wire sizes in the wire specifications below.
4. Wire and breakers are properly specified for the environment they are installed in.
5. Backup generators should include line conditioning suitable for running electronics.
6. Follow the manufacturer's torque specifications for all power wire equipment by others.
7. Install service disconnects on incoming power feeds at the heat pump location.
8. All power wiring to the unit must be rated for 600v.

To Install the Power Wires

Electricians must create their own entry into the C90A heat pump. There are two points that require creation of an access hole, both marked with "Knock Out Hole Here" stickers as shown in Figure 11. All holes should be weather tight when installation is completed.

1. Open the electrical enclosure access door.
2. Locate the two "Electrical access - knockout hole location" stickers.
3. Drill or knock out both sticker locations.
4. Run conduit to/through the knockouts with appropriate, weather tight connections, and pull wire into the enclosure.
5. Make the power wire and ground wire connections in accordance with Diagram 4. Use 375 foot-pounds of torque on heat pump wire terminal connections.

Figure 11: Power Wiring Knockout Location

Diagram 4: Power Wire Connections

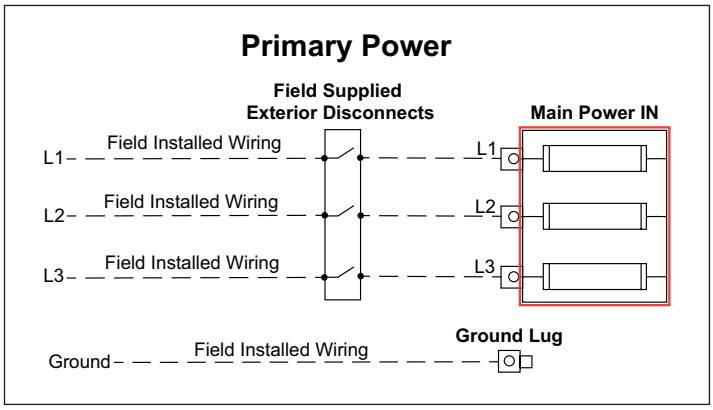

Control Wiring

C-Series heat pumps have several contact points for field wiring of external controls. More contacts can become available with the installation of various field accessories, and details on those accessories are shown in their respective installation instructions.

Nyle recommends running enough conductors to use all available contacts if the installation site would make wire retrofits challenging, even if those contacts are not intended for use during the initial installation. This allows changes and reconfiguration to happen seamlessly in the future. Additional conductors to allow for wire breakage, and/or the addition of future accessories, is also recommended.

The following drawing and notes provide a quick reference of the available contacts on the base heat pump, and what they are used for. For more advanced configuration guidance, see the Configuration section of this manual and/or instructions for any relevant accessories.

All control wiring should follow best practices, local codes and regulations, and NEC/CSA guidelines.

Do not steal power from powered contacts for external devices. Follow all ratings and wire types for the contacts detailed below.

CAUTION

Contacts labeled “Dry” are intended to switch power from external sources. DO NOT APPLY EXTERNAL POWER to any contact that is not “Dry”. Equipment damage and system failure can result from applying power to a powered contact. Follow all power specs for each contact.

Diagram 5: C90A Control Wiring Connections

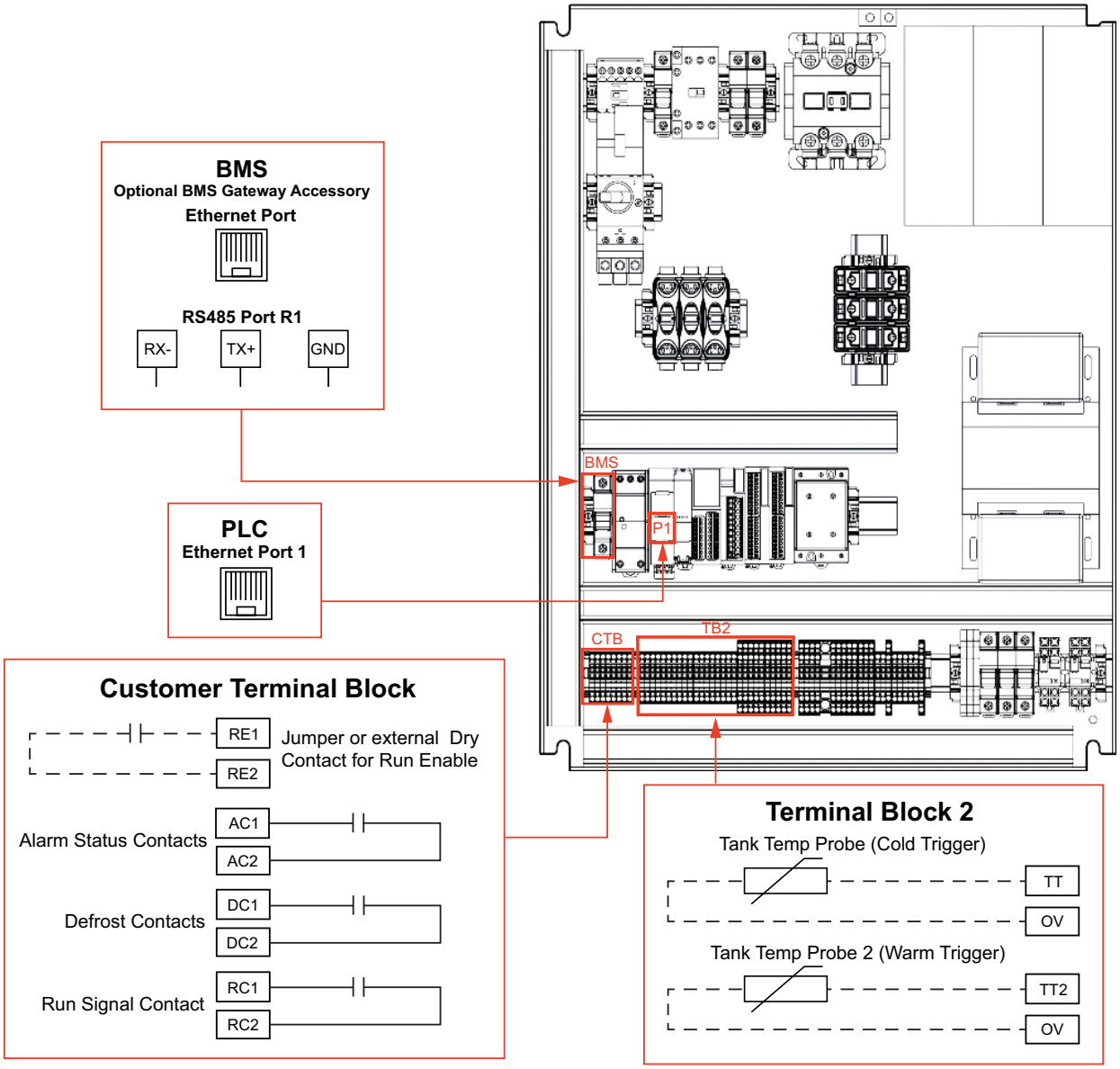

Control Wiring Installation

1. Ensure the heat pump is powered down when making electrical connections.
2. Create a control wire access point on the C90A: a pass-through on the rear panel, where the pipes enter and exit the heat pump, is recommended.
3. Run all external sensor wires and/or control wiring for field accessories through the access point.
4. Open the electrical enclosure. The top of the enclosure has several cable glands and/or knockouts available. Control wires may use any available entry point into the enclosure not running line voltage wiring. Wires will traverse the compressor cabinet to access these entry points.
5. Once in the enclosure, wires can be entered into the electrical raceways to get to the appropriate termination locations. See Diagram 4 on page 22 for specific wire runs.
6. Tug test the new connections, and then close the electrical enclosure. It is now safe to restore power to the heat pump.

Field Wiring Control Points

Alarm Status Contacts: This dry set of contacts close whenever the compressor will not run because of lockout. Backup heat sources can use this as an enable trigger.

BMS: The Ethernet or Serial connection is used to connect to building automation systems. See appropriate accessory documentation for details on these contacts.

Defrost Contacts: This dry set of contacts close whenever defrost functions are active.

Ethernet: Ethernet cable is not necessary for standalone operation. Ethernet is used for connecting the optional Master Control Panel, various accessories, and service laptop connections, and will be necessary for future products and functionality. Roughing in a CAT-5 or CAT-6 cable at installation is recommended.

Remote Enable: When “External Demand” mode is enabled during configuration, these terminals will place a heat demand on the heat pump when an external controller closes a set of dry contacts. No tank sensor is wired to the heat pump in this mode.

In “Tank Sensor” mode, these contacts can be jumped, or this can be used as a permission signal by external dry contact controls to allow/disallow compressor operation. Please note that a unit in “Tank Sensor” mode will not run without a jumper or closed contact between the remote enable terminals!

Remote enable contacts ship with a factory installed jumper.

Run Signal Contact: This dry set of contacts close whenever the internal circulator is engaged. External devices that need to run in response to the heat pump can use this as a trigger, such as louver motors and/or booster pump relays.

Tank Temp: This sensor input allows the heat pump to monitor and control the tank temperature. Take care that the Tank sensor is installed in accordance with the sensor diagrams appropriate to the type of heat pump in use, single- or multi-pass. Tank Temp will serve as the Cold trigger in multi-pass systems. See Tank Sensor detail sections following this section. Refer to Figure 12 or Figure 14 on page 25.

Tank Temp 2: This is the Warm trigger sensor in multi-pass systems. See Tank Sensor detail sections following this section.

Table 7: Control Wiring Specifications

Contact	Location	Terminals			Wire Type	Power
Alarm Status	CTB	AC1	AC2	--	Any	Dry[4]
Defrost Status	CTB	DC1	DC2	--	Any	Dry[4]
Remote Enable	CTB	RE1	RE2	--	Any	Dry[4]
Run Signal	CTB	RC1	RC2	--	Any	Dry[4]
Service Mode[1]	TB2	i7	24v	--	Any	24Vdc
Tank Temp	TB2	TT	0v	--	Stranded/Shielded	24Vdc
Tank Temp[2]	TB2	TT2	0v	--	Stranded/Shielded	24Vdc
BMS[2]	COM	A1	B1	SC1	Stranded/Shielded	Variable
Ethernet	PLC	Note 3	--	--	CAT-5 or CAT-6	--

Notes:

1 Service Mode enables access to the Diagnose screen. Jump terminals for access.

2 Reserved terminals used by optional accessories and/or internal wiring. See accessory instructions.

3 Ethernet Port on internal PLC controller

4 All CTB Dry contacts are rated for 6A/250VAC, or 6A/30VDC maximum.

Single-pass Tank Sensors

Single-pass systems require a trigger sensor or aquastat relatively low in the tank to initiate a demand when very cold incoming water is detected. This is typically mounted at or near the “Minimum Cold Cycle Volume” for the heat pump, as measured from the piping inlet on the tank from which the heat pump will draw its cold water, typically as close to the bottom of the tank as possible. Tank volume above the trigger sensor is called the “Capacity Volume”, which is the minimum amount of stored hot water needed to make it through peak demand periods.

A separate termination sensor is used to end the demand, when water that is sufficiently hot is detected. This can be an internal water temperature sensor on the heat pump, or a dedicated sensor on the common pipe to the heat pump inlets as typically used in multiple heat pump systems using a central controller.

Staging is achieved with additional sensors in the storage tank to track the movement of the stratified hot water layer. For small arrays, a typical staging strategy would include sensors for a single stage, a sensor for 50% of available stages, and a sensor for all stages to run. Nyle heat pumps require the use of external controllers for staging, and provide a controller for this purpose as an optional accessory.

Figure 12: Single-pass Tank Sensor Location

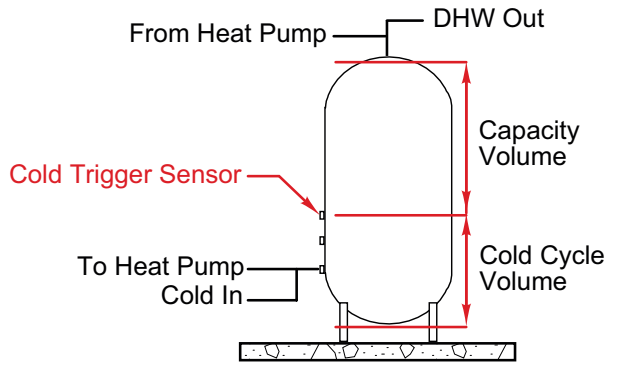

Note: Minimum CCV is listed in the heat pump specifications.

Figure 13: Single-pass, Multiple Heat Pumps with Central Controller

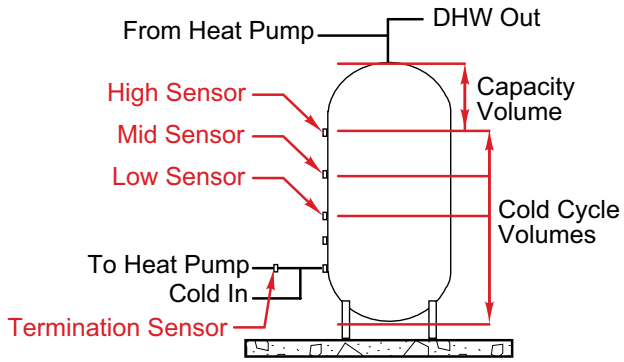

Notes:
1. Minimum CCV is listed in the heat pump specifications.
2. Multiply minimum CCV by the minimum number of heat pumps to operate simultaneously for each sensor position.
3. Ensure high sensor point allows for adequate capacity volume above the sensor.

Multi-pass Tank Sensors

Cold Trigger Sensor

Multi-pass systems require a cold trigger sensor low in the tank to activate on incoming cold water temperature, but not at recirc return temperatures. This allows the fastest response possible during demands without short cycling. This sensor also determines when heat demands are satisfied, when it reaches the tank target temperature.

Figure 14: Multi-pass, Single Tank Sensor Locations

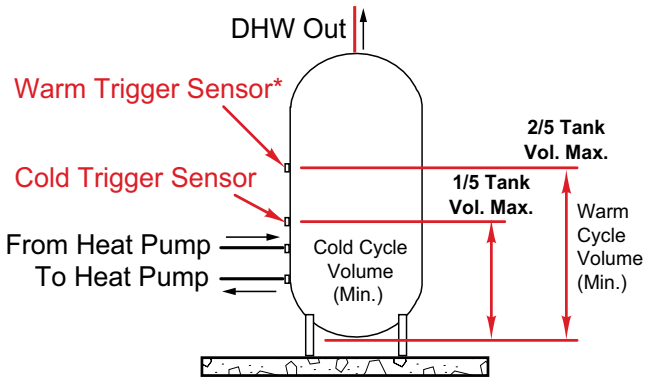

*Warm Trigger set above recirc return temp.

Figure 15: Multi-pass, Multiple Tanks with Central Controller

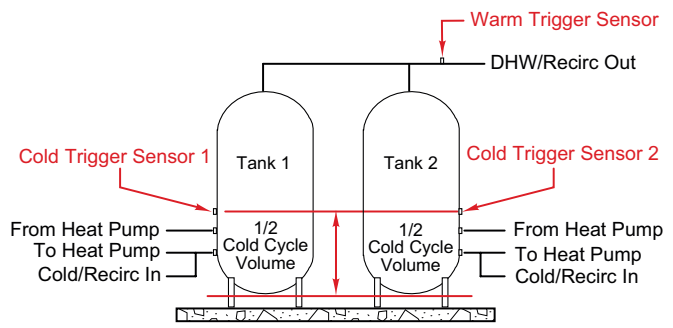

Notes:
1. CT sensors mounted at a maximum of 1/5 of total tank height.
2. Minimum CCV are in the heat pump specifications: ensure enough CCV is included for the minimum number of heat pumps to run simultaneously.

Cold Trigger Sensor Placement Rules

1. The cold trigger sensor must allow for a MINIMUM cold cycle volume for the heat pump below the sensor.
2. Nyle recommends a MAXIMUM of one-fifth of the total tank volume be below the cold trigger sensor.
3. Both volumes are the volume of water from the sensor position to the bottom of the tank.

Warm Trigger Sensor

A second warm trigger sensor is used higher in the tank. This sensor is used to activate at warmer, recirculation loop return temperatures, and provide for additional volume to avoid short cycling.

Warm Trigger Sensor Placement Rules

1. The warm trigger sensor must allow for a MINIMUM warm cycle volume for the heat pump below the sensor.
2. Nyle recommends a MAXIMUM of two-fifths of the total tank volume be below the warm trigger sensor
3. Both volumes are the volume of water from the sensor position to the bottom of the tank.
4. In multiple-tank, multiple-heat pump applications, the warm trigger sensor may move to a common hot water outlet pipe, and it becomes a “minimum outlet temperature” sensor to signal a maximum stage event is necessary. See Figure 15.

Optional Ducting and Ventilation

C-Series air source heat pumps draw air in through the evaporator coil, and discharge air from the face of the unit. This is typical of outdoor installations, and outdoor applications are typically installed without ducting.

However, heat pumps can be installed indoors. Highly ventilated areas, such as below grade parking structures, can sometimes be installed without ducting. Likewise, areas with pervasive and significant heat gains from external sources may be able to replace the heat that the C90A unit removes in real time, such as in large commercial mechanical rooms or server farms.

CAUTION

Interior, ductless applications require very close considerations to heat gains and losses to avoid over cooling the space, and/or reducing the heat pump efficiency or performance. These calculations should be undertaken by a qualified engineer, and should take into account current and future uses of the space. For example, if the heat gain from a large steam boiler allows the installation of a large heat pump in a mechanical room, the lifespan and likely replacement plan for that boiler needs to be considered.

Note that while air source heat pumps do cool their discharge air, cooling is entirely dependent upon the need for hot water production. Since the unit cannot be controlled to any particular setpoints for cooling, it can only be considered as a supplement for another, primary cooling system.

In most indoor installations, ducting will be required to operate safely and efficiently. Ducting allows the unit to draw in outdoor air, and/or to discharge air to the outdoors, or to control both intake and discharge air movement. Ducting can significantly reduce freeze risks, and it can simplify maintenance access and/or provide superior protection to many potential outdoor locations.

Check the heat pump’s performance specifications for maximum airflow volume (CFM) and available static pressure (In. W.C.). These values form the basis of a duct design, and all ducting should be designed by qualified duct designers.

Nyle air source heat pumps are tuned for either ductless or ducted applications in the factory. Contact Nyle if fan speed adjustments are needed on a particular project.

CAUTION

Guidance offered in this manual is intended to provide context for the designer, and DOES NOT replace the need to have duct designs created by qualified designers of commercial grade ducting. Inadequate duct systems can result in premature system failure, under performance, unacceptable noise, condensation, and water damage.

Ducting Requirements

1. **Insulation:** all ducting in conditioned spaces require insulation for energy and condensation control. Insulation thickness is dictated by local energy codes, climate, and the conditioned space's indoor climate conditions. Reflective insulation duct wrap is not sufficient insulation by itself. Air temperature in discharge ducting can be significantly below minimum operating ambient temperatures.
2. **Sealing:** all ducting and insulation should be well sealed along all joints and seams, to air conditioning standards for condensation control. Use sealants rated for the full range of intake and discharge air temperatures. See guidance in Table 8 on page 27.
3. **Coil Access:** the heat pump evaporator coil and condensate pan are service items that require periodic access for cleaning. Intake ducting, if used, should include an access door to allow for inspection and cleaning of the entire coil and drain pan.
4. **Dampers:** in very cold climates, motorized dampers or louvers can reduce freeze risks significantly, preventing cold outside air from migrating to the unit in between heating cycles. Louver/damper motor speeds need to be 30 seconds or less.
5. **Moisture Control:** exterior louvers, and ducts serving them, should be designed to limit moisture intrusion, and to control what intrusion does occur.
6. **Screens:** bird screens are required on all exterior duct terminations.
7. **Duct Sizing:** ducting must be sized to the design CFM rate and external static pressure for the heat pump.
8. **Velocity Control:** Air velocity should be evaluated for each installation and ducts sized accordingly for the particular project's needs. Very sound sensitive installations may need lower velocities, and possibly additional noise control measures such as duct lining or additional exterior insulation. Minimum areas listed in the "Ducting Specifications" assume 1200 FPM maximum on intake ducting and 1600 FPM maximum on discharge ducting.
9. **Duct Construction:** all ducting and sheet metal should be constructed to SMACNA standards. Flex Duct and fiberboard are not recommended.
10. **Vibration Control:** canvas connectors or other duct vibration isolation measures are recommended.
11. **Smoke/Fire:** be aware of local smoke/fire protection requirements that may apply to your ducted system.

Table 8: Ducting Specifications

		Sealant Temperature Rating [1]		
Duct Type	**Pressure Class**	**Minimum**	**Maximum**	**Minimum Attachment Area [2]**
Intake Ducting	-1 In.	Winter Ambient	Summer Ambient	432 Sq. In.
Discharge Ducting	+1 In.	20 Degree F.	Summer Ambient	324 Sq. In.

Ducting Specifications Notes:

1 Winter/Summer temps are the seasonal extremes experienced in the ambient conditions.

2 Minimum area is the min. cross sectional area of ducts for typical velocities, and are not a substitute for formal duct sizing. Velocity targets vary for each project. 1200 FPM max for intake and 1600 FPM max for discharge used for reference.

Configuration

CAUTION

Setting configuration options for the heat pump will require active main power. While activating the main power for programming is safe, turning compressor operation "on" at this stage is not. **Complete the Pre-Startup Checklist before pressing the "ON" button in the control interface!** Operating the heat pump compressor before all checks have been performed can result in severe equipment damage or major component failure.

This manual addresses configuration of individual heat pump water heaters. For projects with centralized controllers connected to multiple heat pumps, or BMS control systems, be sure to refer to additional instructions for the configuration of those accessories.

Heat Pump Controller Screens

Nyle C90A heat pumps come with a full color touchscreen mounted on the front of the cabinet, under a weatherproof enclosure. Whenever 120v power is available from the heat pump's internal transformer, the controller will be active. These are the primary screens that may be used during installation and typical operation.

Home Screen: This is the default display screen, and features a variety of indicators related to the current operation of the unit.

Config. Screen: Most user-configurable options are available on these screens. However, the installation of a service jumper between the 24v terminal and i7 on the TB2 terminal block is required to access the configuration pages

Diag. Screen: Operating information specific to troubleshooting and diagnostics are available here, as well as selected diagnostic and/or commissioning tools. More detail on the "Diagnose" screen items is available in the Troubleshooting section of this manual

Alarms Screen: This screen displays currently active alarms. More detail on alarms is available in the Troubleshooting section of this manual.

Error Log Screen: This screen displays a navigable record of the alarm history for the unit.

Configurable Modes

C series heat pumps can be Single-pass or Multi-pass, and each type has its own configuration requirements. **It is very important to ensure that the heat pump configuration matches the installation type, and is configured properly to ensure proper operation.**

In addition to the system type, C series heat pumps can be configured to run in "Tank Mode", or in "Remote Mode". Each mode changes operation and configuration in several ways:

In Tank Mode; the heat pump expects to have its own sensors wired directly to the storage tanks. In this mode, the heat pump determines when heat demands should start and stop based on those sensor readings as well as the additional safeties and sensors built into the heat pump. Tank mode will monitor the Remote Enable terminals, which must have a jumper or closed set of contacts across them to enable, or allow, operation in tank mode.

In Remote Mode; a device other than the heat pump determines when heat is needed, and it passes a heat demand to the heat pump, either over a BMS connection using the BMS accessory option, by a dry contact closure on the heat pump's "Remote Enable" input, or by direct connection to a Nyle central controller. In this mode, the heat pump responds to heat demands on the basis of entering and leaving water temperatures at the heat pump. The heat pump is not involved directly with the tank temperature logic, and does not have its own sensors wired to the tank, it only responds to demands for heat presented by the external controller.

This gives 4 major configuration sets for C series heat pumps: Single- or Multi-pass operation, and Tank or Remote mode.

Universal Configuration Options

The following additional items are configurable on the second configuration page, and are applicable to all operating modes:

Flow Verification Timers: The amount of time the unit will wait to verify flow for the evaporator (fans) or condenser (water loop). Adjustable to accommodate external control devices with variable motor times.

Max Purge Time: If the Purge Cut Out is not reached, the post purge will stop after this much time.

Purge Cut Out: At the end of a heat demand, the pump will continue to run to purge heat from the heat pump, until this temperature is detected as the leaving water temperature from the heat pump.

Standby Flow Valve Position: Whether the internal flow control valve is open or closed when the heat pump is not actively heating.

Single-pass Modes – Tank Mode for Single-pass

Diagram 6: Single-pass Configuration Page

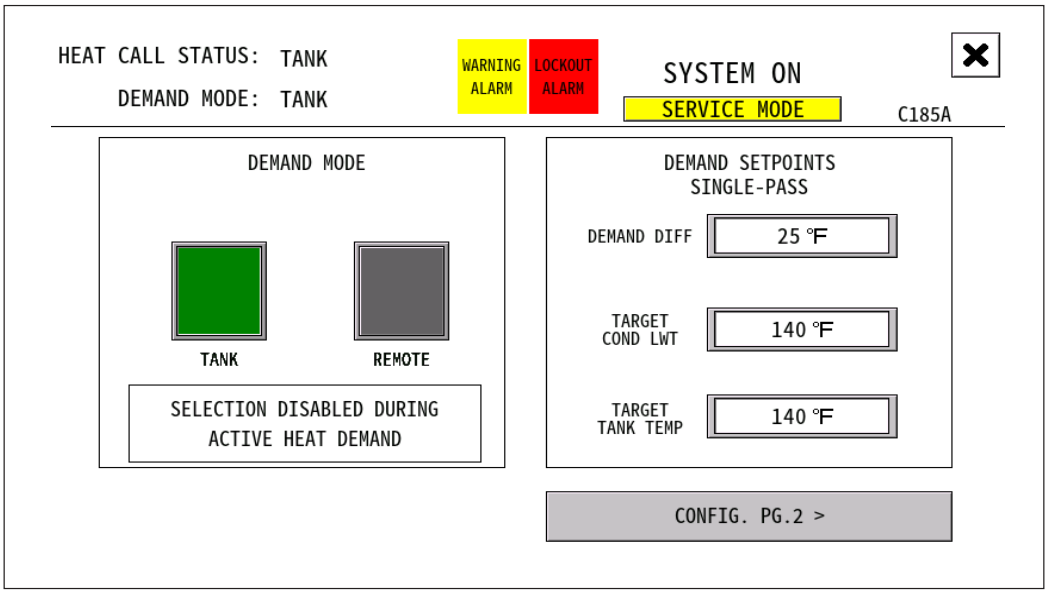

Tank Mode Sequence of Operation for Single-pass

1. When the tank sensor detects a temperature below **(Target Tank Temp - Demand Diff)**, and there is a closed circuit between the Remote Enable contacts, demand begins.
2. Heat pump begins heat cycle, modulating its output water temperature to **Target Cond LWT**.
3. When the heat pump entering water temp sensor detects water at **(Target Tank Temp - Demand Diff)** temperature, demand ends.
4. At demand end, internal circulator will continue to run until **Purge Cut Out** temperature is reached, or **Max Purge Time** is reached, whichever comes first.

Tank Mode Programming for Single-pass

On the "Config." Screen:

1. Set the "Demand Mode" to "Tank"
2. Set the "Target Tank Temp" value to the desired primary storage temperature.
   a. In commercial systems, this is typically 140 Deg F.
3. Set the "Demand Diff". This is the value below "Tank Set" which will start or end a heat demand.
   a. For single pass systems, Tank Temp Diff should be 25 degrees or greater, depending on the Tank Set value.
   b. Heat demands should trigger below 115 degrees F sensed temperature, so a "Tank Set" above 140 will need greater than 25 degree Tank Temp Diff.
4. Set "Target Cond LWT" to the desired target water temperature from the heat pump
   a. This must equal or higher to the "Tank Set" value. Typically it's equal, but in some piping and tank systems, a small amount of temperature drop can occur from the heat pump outlet to the tank sensor, which may necessitate raising the heat pump LWT slightly to reach desired storage temperatures.
   b. Do not set above 160 Deg F.
5. Verify that there is a jumper or an external permission controller on the Remote Enable terminals.

CAUTION

Setting the C90A to target temps above 160 degree F can shorten compressor life and void warranty.

The heat pump will allow itself to exceed the target outlet temperature if incoming water is too hot, flow is too low, and/or during high capacity conditions, up to its maximum operating temperature for the current ambient conditions.

Remote Mode for Single-pass

Diagram 7: Single-pass Configuration Page

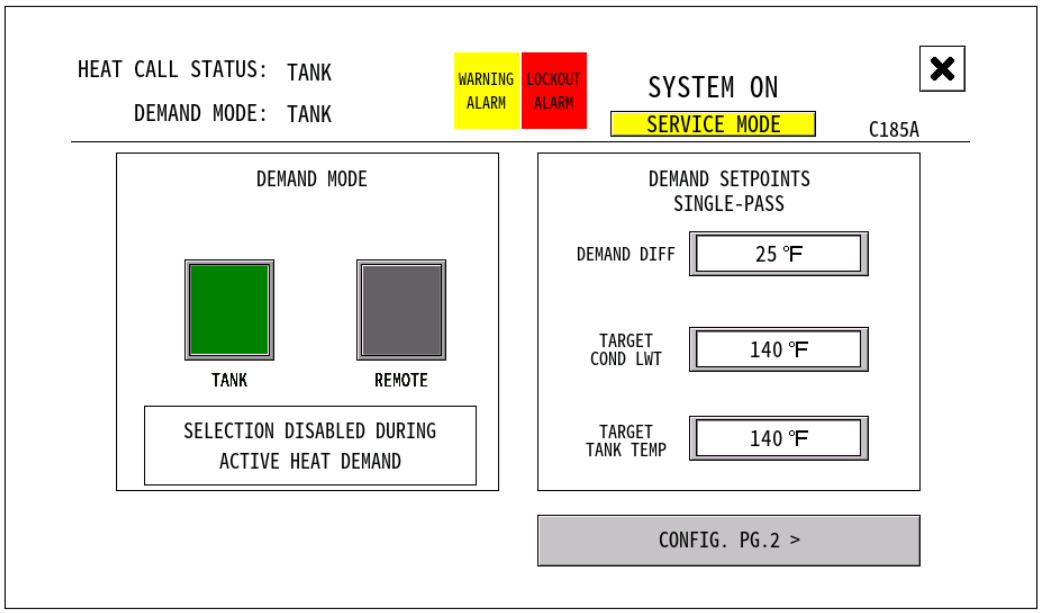

Remote Mode Sequence of Operation for Single-pass

1. Demand begins when an external device (BMS, Central control, or controller wired to “Remote Enable” contacts”) starts a heat demand.
2. Internal circulator begins operation, and will not stop operation until demand condition is removed by the external control, regardless of compressor status.
3. Heat pump begins heat cycle, modulating its output water temperature to **Target Cond LWT**.
4. When the heat pump entering water temp sensor detects water at **(Target Cond LWT - Demand Diff)** temperature, compressor operation will stop.
5. If the heat pump entering water temperature drops below **(Target Cond LWT - Demand Diff)** temperature, and the compressor time delay times out, compressor operation will resume.
6. Demand ends when the demand condition is removed by the external control device.
7. At demand end, internal circulator will continue to run until **Purge Cut Out** temperature is reached, or **Max Purge Time** is reached, whichever comes first.

Remote Mode Programming for Single-pass

On the “Config” Screen:

1. Set the “Demand Mode” to “Remote”
2. Set “Target Cond LWT” to the desired target water temperature from the heat pump.
   a. In commercial systems, this is typically 140 Deg F.
   b. This will determine the maximum storage temperature the tanks can achieve. Ensure that external controls will be satisfied at this temperature.
   c. Do not set above 160 Deg F.
3. Set the “Demand Diff”. This is the value below “Target Cond LWT”, which will stop compressor operation.
   a. For single pass systems, cut out should occur at 115 degrees or lower, so for a typical 140 deg F LWT system, this should be set to 25 or higher.

CAUTION

Setting the C90A to target temps above 160 degree F can shorten compressor life and void warranty.

The heat pump will allow itself to exceed the target outlet temperature if incoming water is too hot, flow is too low, and/or during high capacity conditions, up to its maximum operating temperature for the current ambient conditions.

Multi-pass Modes – Tank Mode for Multi-pass

Diagram 8: Multi-pass Configuration Page

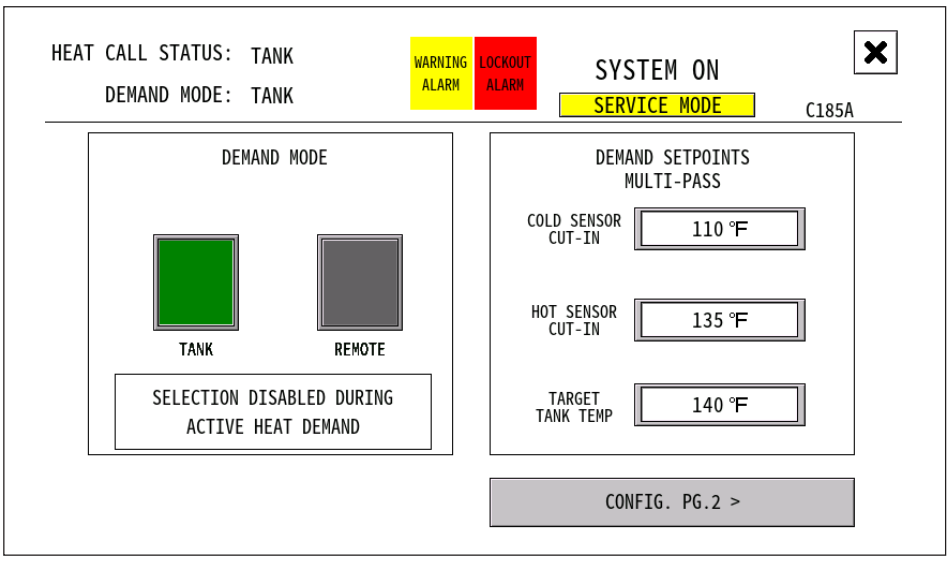

Tank Mode Sequence of Operation for Multi-pass

1. When the cold or warm tank sensors detect a temperature below their respective cut-ins, and there is a closed circuit between the Remote Enable terminals, demand begins
2. Heat pump begins heat cycle, heating water at a temperature rise dictated by flow rates and current capacity of the unit.
3. If Current LWT is below 100 Deg F., the internal flow control valve will reduce flow rates to maintain a minimum LWT of 100 Deg F, resuming full flow at higher LWT conditions.
4. When the Cold trigger sensor detects water at **Target Tank Temp** temperature, demand ends.
5. At demand end, internal circulator will continue to run until **Purge Cut Out** temperature is reached, or **Max Purge Time** is reached, whichever comes first.

Tank Mode Programming for Multi-pass

On the "Config" Screen:

1. Set the "Target Tank Temp" value to the desired storage temperature.
   a. In commercial systems, this is typically 140 Deg F.
   b. Do not set this above 140 Deg F. in multi pass systems with the C90A, as this can result in unacceptably high leaving water temperatures.
   c. This temperature will determine when the heat demand ends.

CAUTION

Setting the C90A to target temps above 160 degree F can shorten compressor life and void warranty.

2. Set the "Cold Sensor Cut-In". This is the temperature that will initiate a heat demand at the cold (Low) sensor position.
   a It should be set BELOW the expected temperature of any recirculation loop returns.
   b. Typically, 100 deg F. or lower is recommended.
3. Set the "Warm Sensor Cut-In". This is the temperature that will initiate a heat demand at the warm (High) sensor position.
   a. It should be set ABOVE the expected temperature of any recirculation loop returns for single tank configuration.
   b. In multiple tank configurations where this sensor is a common pipe outlet sensor, it should be set above the minimum temperature allowed to go to the mixing valve.
   c. Typically, 125 Deg F. or higher is recommended.
4. Verify that there is a jumper or an external permission controller on the Remote Enable terminals.

Note: *Multi-pass systems in Tank mode can function without the warm trigger sensor, however, it becomes very difficult to ensure good performance at different tank conditions. Best practice for single sensor multi-pass will double required storage volumes to protect against under performance. If recirc return loops are present single sensor Multi-pass systems should not be attempted without proper engineering and application design support.*

Remote Mode for Multi-pass

Diagram 9: Multi-pass Configuration Page

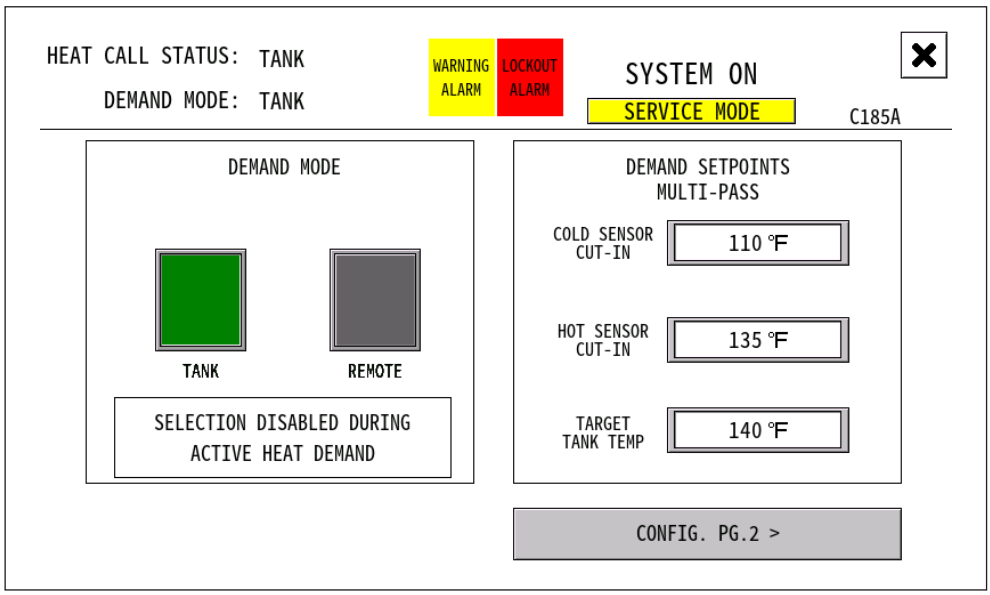

Remote Mode Sequence of Operation for Multi-pass

1. Demand begins when an external device (BMS, Central control, or controller wired to “Remote Enable” contacts”) starts a heat demand.
2. Internal circulator begins operation, and will not stop operation until demand condition is removed by the external control, regardless of compressor status.
3. Heat pump begins heat cycle. If the leaving water temperature is below 100 Deg F., flow will be reduced to maintain a minimum LWT of 100 Deg F.
4. If the heat pump entering water temp sensor detects water at 142 Deg F, compressor operation will stop.
5. If the heat pump entering water temperature drops below 142 Deg F., and the compressor time delay times out, compressor operation will resume.
6. Demand ends when the demand condition is removed by the external control device.
7. At demand end, internal circulator will continue to run until **Purge Cut Out** temperature is reached, or **Max Purge Time** is reached, whichever comes first.

Remote Mode Programming for Multi-pass

On the “Config” Screen:

1. Set the “Demand Mode” to “Remote”

Remote mode in multi-pass does not modulate water temperature or flow rates other than at low LWT conditions, and does not generate heat demands internally. Therefore, there are no water temperature targets to set on the unit. The heat pump will simply run in response to demands until demand is satisfied or high temp safeties are reached.

Pre-Startup Checklist

The following checklist is provided for reference, to assist in preparing for the eventual startup of the equipment. Please contact your manufacturer's representative MORE THAN ONE MONTH from your intended startup date. The following checklist items will be reviewed for compliance before a final startup is scheduled with a factory authorized commissioning agent.

CAUTION

Heat pump startups may only occur with a factory authorized commissioning agent. Do not start the heat pump before the authorized agent is on site and ready to assist, or you may void your warranty and cause equipment damage or failure.

Placement and Physical Checks

- ☐ Unit is level, stable, and securely mounted.
- ☐ Unit has all appropriate service clearances, and access panels are not obstructed by pipes, wires, or other obstacles.
- ☐ Unit is adequately protected from falling objects, vehicles, or other potential damage.
- ☐ Fans are securely mounted and wired to the unit.
- ☐ Open the heat pump and inspect the cabinet around the refrigeration piping and compressor for any signs of leaks or oil. If any signs of refrigerant leak are present, DO NOT START THE UNIT. Leaks need to be identified and fixed, and refrigerant charge weighed, before startup can occur safely.
- ☐ Perform a tug test on all wires in the electrical enclosure, to ensure all wires remain firmly seated after shipping. Ensure all power feeds are powered down for this testing.

CAUTION

Damage to the compressor due to startup with visible leak indication is not covered by warranty.

Air and Ducting Checks

- ☐ Ducting, cowl, or plenums are secured to the unit, sealed, and insulated as appropriate.
- ☐ Ducting, if present, is complete, insulated, and connected to terminal grilles/louvers.
- ☐ Exterior louvers and connecting ductwork will limit moisture intrusion, and drain in or out for what moisture does intrude.

Water and Piping Checks

- ☐ Exterior water piping is insulated, freeze protected, pitched toward drain points.
- ☐ All water piping has been pressure tested and verified leak free.
- ☐ All water piping has been filled with water and actively purged of air.
- ☐ Pressure relief valves are piped to the floor, drain, or reservoir as per local codes.
- ☐ Water quality has been determined to be acceptable for operation and potable use.
- ☐ Verify tank temperature probe or aquastat is installed as per the tank sensor diagrams in the "Control Wiring" section of this manual for single or multi-pass operation, as appropriate.

Condensate Management Checks

- ☐ Exterior condensate piping is insulated, freeze protected, pitched toward drain points.
- ☐ Pour several gallons of water slowly into the condensate pan, and verify the drain is clear and operational.
- ☐ Condensate pump, if used, is plugged in and operational.

Electrical Checks

- ☐ Main power wires are securely attached to the heat pump and active.
- ☐ All control and communication wires are securely attached, and connected equipment is in place and ready to operate.
- ☐ Verify jumper or controller is installed on Remote Enable terminals if the heat pump is in tank mode. Verify jumper is NOT installed on Remote Enable terminals if the heat pump is in external control mode.

Final Checks

- ☐ All panels and enclosures are securely closed and affixed.
- ☐ All ball valves in the piping systems are open, including valves on expansion tanks, storage tanks, condensate drains and swing tanks.
- ☐ Turn on the main power to allow the heat pump to warm up. DO NOT engage any functions on the control interface.

Startup Procedure

CAUTION

C-Series heat pumps must be on active power for at least 6 hours before pressing the "On" button to enable operation. Failure to allow this warm up time can result in damage to the compressor. Activate the main power feeds, and ensure the system is "off" at the control interface during this period.

Nyle Heat Pumps are to be started up by factory authorized commissioning agents ONLY.

Startup dates are to be requested through your manufacturer's representative more than one month before the intended startup.

Pre-Startup checklists must be submitted and complete more than 5 days before the startup date.

Troubleshooting

Please use the following lists of startup issues, alerts and faults to assist with the diagnosis and troubleshooting of some common problems.

Note: *In the rare event that major components end up damaged or defective, you MUST obtain assistance and approval from your rep or from Nyle to authorize warranty replacement, BEFORE the components are removed from service.*

Relevant Screens for Troubleshooting:

The interface on the heat pump has information available to assist with troubleshooting, on the Main display page and on the Diagnostic pages.

Diagram 10: Main Interface Page

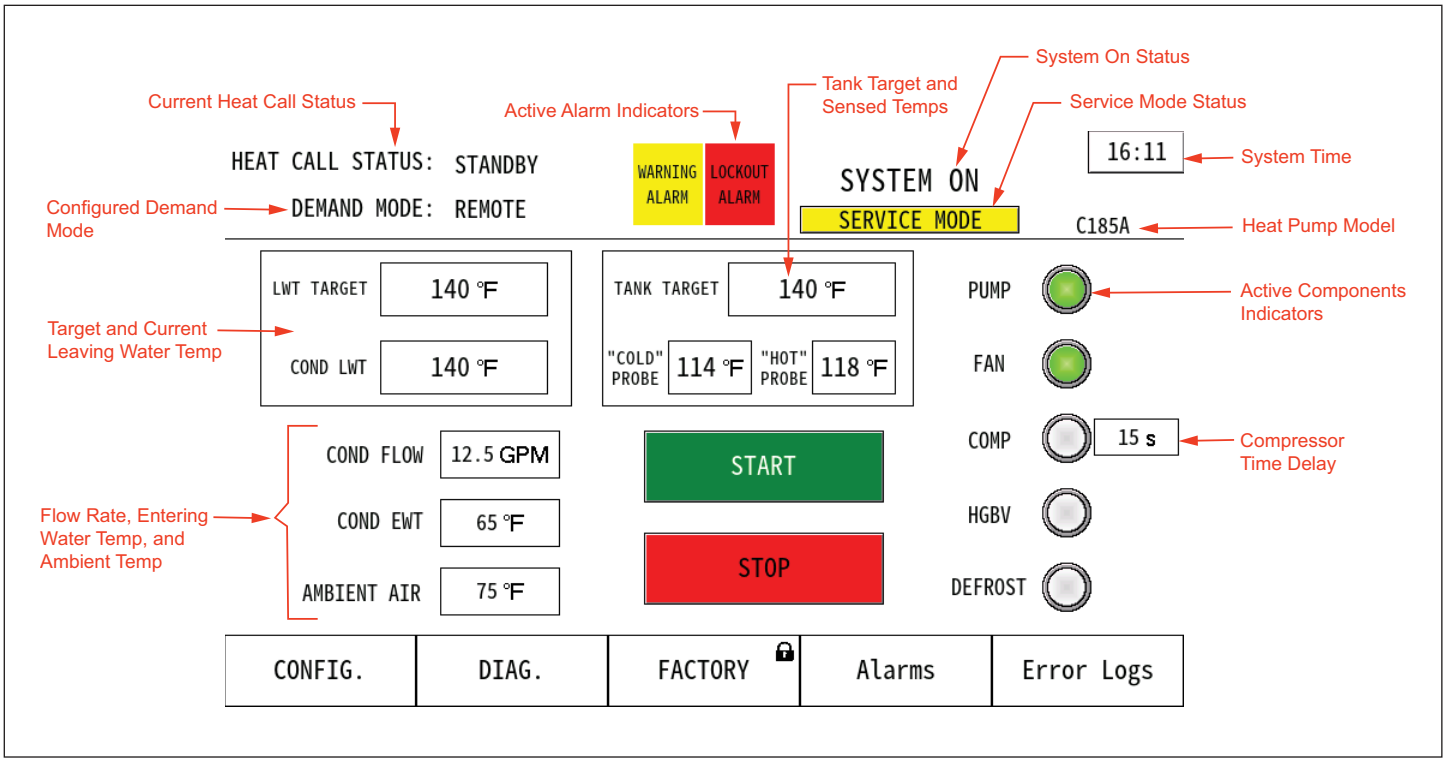

Diagram 11: Diagnostic Interface Page

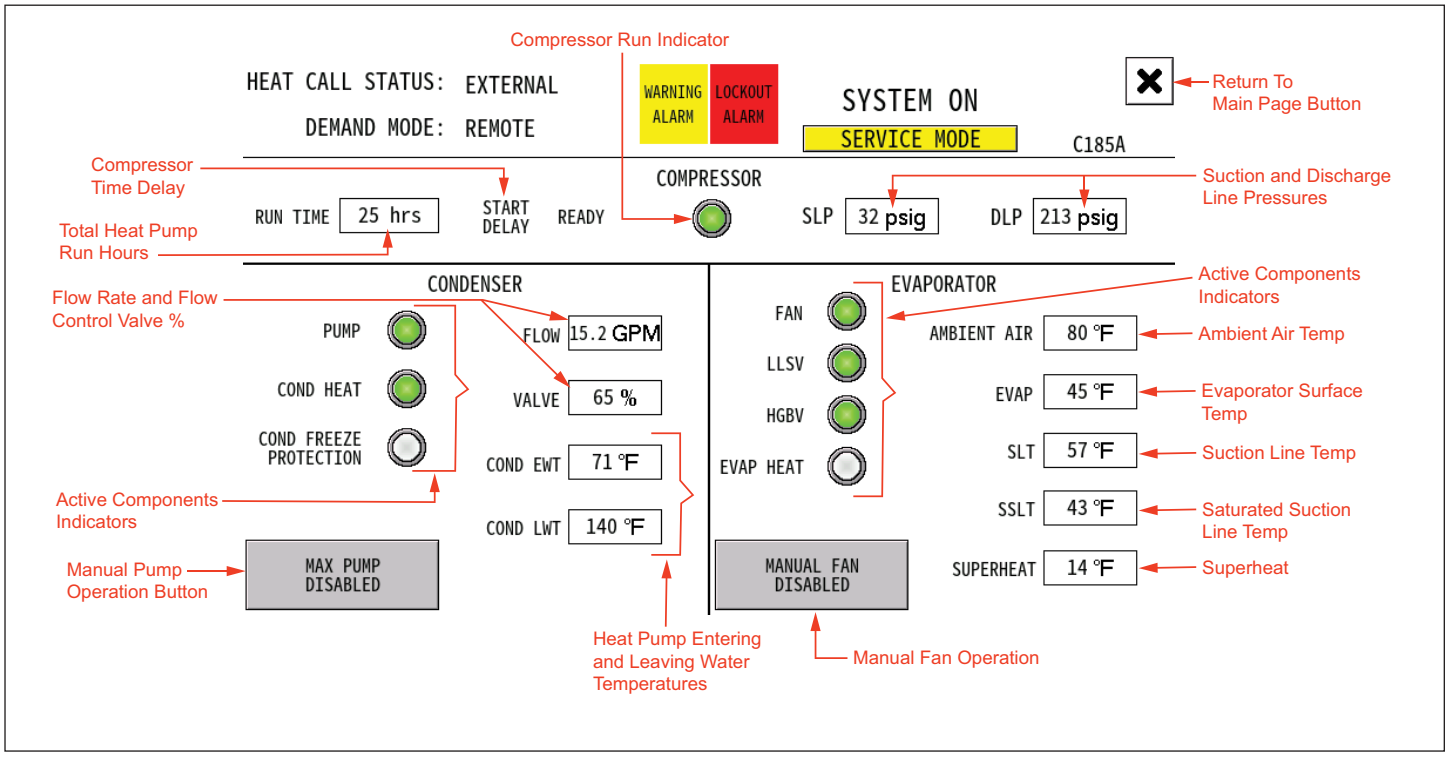

In addition to the above informational pages, you can access the “Alarms” and “Error Log” pages from the main screen. The Alarms page displays currently active alarms, and the Error Log displays a record of alarm conditions that the heat pump has experienced.

If alarms or problems occur, please use the Troubleshooting tables to help guide the response beginning on page 36.

Troubleshooting

Problem	Check
Display Screen is Dark	Main power is active at breaker and input terminals.
	Transformer is providing 120v power.
	Control screen is receiving power.
Can’t Access Configure/Diagnose Screens	Service jumper is installed and secure.
Heat Pump Won’t Run	Primary power is active.
	No alarms or alerts present on control screen.
	System parameters would create a demand.
	System is turned "On" at control screen.
	System is "Enabled" by BMS.
Pump or Fans Run, but Not Compressor	No Alarms are present.
	Heat pump is not in post purge.
	Compressor Time Delay (CTD) is zero.
	Freeze protection is not active.
Coil is Icing/Not Removing Ice	Evaporator intake is not blocked or obscured.
	Discharge is not blocked or obscured.
	Ducting, if present, allows sufficient airflow.
	Fans are fully operational.
	Defrost is triggering.
	Ambient/Evap temps are low enough for frosting.
	Refrigerant charge is adequate.
	TXV/filter dryer allow sufficient refrigerant flow.
Unit Runs, but Water Temperature is Insufficient	Tank and/or outlet temps are set correctly.
	Internal control valve is working properly.
	Outlet temp is allowed by current ambient temps.

Alert/Fault	Trigger	Check
High Pressure	Refrigerant pressure is too high	All Outlet Flow checks are good.
		Ambient temperature is not too high.
		Inlet water temperature is not too high.
		Wye strainer is clean.
		Refrigerant charge is not too high.
		High pressure sensor and wiring are good.

Initial Troubleshooting (Continued)

Alert/Fault	Trigger	Check
Low Pressure	Refrigerant pressure is too low	Air flow is adequate.
		Ambient temperature is not too low.
		Inlet water temperature is not too low.
		Control valve is modulating flow.
		Refrigerant charge is not too low.
		Low pressure sensor and wiring are good.
Condenser Flow	Water flow rate is too low	External valves are open.
		Control valve is opening properly.
		Piping is not air bound.
		Pump is operating w/sufficient pressure.
		Condenser heat exchanger is not fouled/scaled.
		Wye strainer is clear.
		Flow sensor and wiring are good.
Evaporator Flow	A fan fault has been detected	Fans are wired properly
		Fans are able to spin freely
		Fan motor starter and contactor are operational
Evaporator Probe	The temperature sensor for the evaporator has failed.	Sensor is wired securely
		Sensor resistance is in range
		Sensor wire is good.
AOTS Warning	Evaporator Temperature is too hot	AOTS sensor is operating and wired securely
		Defrost elements are shutting down properly
ESTOP	Central control has sent an emergency stop signal	Central control is actually in Estop
Modbus Comm	Modbus Communication detects errors or failure	Wiring between PLC and BMS module is good
		PLC and BMS modules are operational
Oil Pressure	Compressor oil pressure is low	Compressor oil level is good.
		Oil Pump is good.
		No evidence of oil around compressor base.

Initial Troubleshooting (Continued)

Alert/Fault	Trigger	Check
Defrost Max	Defrost ran to the end of the safety timer	Defrost elements are operational
		Evaporator sensor is operational
		Ice/frost is clear from evaporator
		Incoming voltage is at spec
Power Fault	Primary power out of phase or voltage spec.	Primary power wiring correct and secure.
		Power Monitor adjusted to building voltage.
		Building is not experiencing power problems.
		Building voltage is in spec.
		Power Monitor and wiring are good.
Pump Down Safety	Pump down has not successfully reduced system pressure	LLSV is operational
		Hot Gas Bypass solenoid is operational
		Compressor is operational
		Low Pressure sensor is operational
Tank Probe	Tank Probe is not detected (TT1 or TT2)	Tank Sensor and wiring are good.
		In Multi-pass Mode, TT2 is connected
		In remote mode, external controller is connected
		System is configured in tank mode if no BMS.
Sensor (Various)	Specified sensor is out of range or not detected.	Specified sensor is wired and operational
M Protection	Compressor contactor not pulling in.	Specified sensor is out of range or not detected.
		Motor protection module wiring is good
		Motor protection module is free of alarms

Routine Maintenance

Like all modern equipment, C-Series heat pumps require routine maintenance to ensure efficient, safe, and reliable operation. Be sure that a maintenance schedule is created and adhered to, and that all personnel involved with maintenance are informed and educated on their role in supporting the system.

Following are suggesting timelines and maintenance items typically associated with C-Series heat pump water heater installations. It is not possible to foresee all possible system configurations, accessories, or site conditions, so this list should be considered advisory only. Final maintenance schedules are the responsibility of the service/maintenance personnel on the project, and should be adjusted in accordance with best practices and observed conditions.

Weekly Checks

- ☐ Visually inspect heat pump for debris around fans, obstruction of evaporator fins, wear or damage to unit exterior, or obstructions around louvers or grilles on ducted systems.
- ☐ Inspect for ice or water buildup around the heat pump.
- ☐ Check screens and/or BMS portals for alarms.
- ☐ Verify the system is within normal operating parameters for water temperatures.

Biannual Checks (Spring and Fall)

- ☐ Check and clear drain pan and/or any drain traps.
- ☐ Treat drain pan for algae/mold prevention.
- ☐ Inspect and clean blower or fan housing as necessary.
- ☐ Inspect blower or fan attachment screws and tighten as necessary.
- ☐ Check drive belt and collar/wheel set screws, clean blower wheel.
- ☐ Inspect and clean evaporator fins as necessary.
- ☐ Inspect and clean cabinet interior as necessary.
- ☐ Inspect and clear any louvers or grilles in attached ducting.
- ☐ Isolate, inspect, and clean any wye strainers on the heat pump piping.
- ☐ Inspect all attached piping and ducting for water leaks and/or uncontrolled condensation.

Annual Checks

- ☐ Confirm flow rate using the “Max Pump” button on the control interface, and verify that flow is at or above maximum design flow for the unit.
  - ☐ Descale heat exchanger if necessary (low flow unsolved by purging/pipe/pump inspection).
- ☐ Operate all relief valves and inspect for signs of weepage or leaking.
- ☐ Ducted Systems: confirm airflow through the evaporator using the “max fan” button on the control interface, by taking static pressure readings in the supply and return ductwork. Total static pressure differential between supply and return ducting should be 0.9" wcg or less.
- ☐ Lubricate pillow block bearings with Shell Alvania #2 or S3 lubricant. **Do not overfill!**
- ☐ With the unit off, disconnect the main power leads on the compressor. With a dielectric tester (megger), test and record resistance on each set of windings. Store this information for future reference. Reconnect the main power leads to the compressor.
- ☐ **Defrost Checks:**
  - ☐ Test resistance of the defrost elements as per the values in Table 9 below.
  - ☐ Check LP sensor and evap temperature sensor to ensure they are functional.

Table 9: Defrost Element Resistance Values

Ohms Between Contactor Terminals			
Heat Pump C90A	**Terminals**	**Target**	**Ohms Single Element**
230v	T1-T2	20.5	92
460v		83.6	376
230v	T2-T3	20.5	92
460v		83.6	376
230v	T1-T3	20.5	92
460v		83.6	376

Limited Warranty

Nyle Water Heating Systems, the warrantor, extends the following LIMITED WARRANTY to the original owner of this commercial heat pump water heater subject to the terms, conditions and disclaimers stated below:

1. Compressor

If the 5-Year Extended Compressor Warranty is purchased, and if within FIVE (5) years after delivery of this heat pump water heater the compressor shall prove, upon examination by the warrantor, to be defective, the warrantor will provide a replacement compressor.

2. All Other Parts

If within 18 months after delivery or 12 months after commissioning of this heat pump water heater any other part or portion shall prove, upon examination by the warrantor, to be defective in material or workmanship, the warrantor will repair or replace such part or portion at its option. This warranty also extends to any factory supplied accessories.

3. Conditions and Exceptions

Refrigerant, filters, refrigerant driers, and fan belts are not covered under this limited warranty. The warranty on all replacement parts, including the compressor, will be limited to the unexpired term of the original warranty. This warranty shall apply only when the heat pump water heater is installed in accordance with local plumbing and building codes, ordinances and regulations, the warranter's printed instructions provided with it and good industry practices.

a. This warranty shall apply only when the unit is:

(1) used at temperatures not exceeding the maximum system temperatures printed in the instructions provided;

(2) filled with potable water, free to circulate at all times and free of damaging water sediment or scale deposits;

(3) used in a non-corrosive and not contaminated atmosphere;

(4) in its original installation location, and under original ownership;

(5) in the United States, its territories or possessions, Canada, South America, Caribbean and Mexico;

(6) sized in accordance with proper sizing techniques for commercial heat pump water heaters;

(7) bearing the original rating label which has not been altered, defaced or removed, except as required by the warranter;

(8) energized at the proper voltage and phase as stated on the rating label;

(9) maintained in accordance with the instructions printed in the manual included with the heat pump water heater;

b. Any accident to the water heater, any misuse, abuse (including freezing) or alteration of it, any operation of it in a modified form, will void this warranty.

4. Service Repair and Expense

Under this limited warranty the warranter will provide only a replacement heat pump water heater or part thereof. The owner is responsible for all other costs. Such costs may include but are not limited to:

a. Labor charges for service, removal, repair, or re installation of the water heater or any component part;

b. Shipping, delivery, handling, and administrative charges for forwarding the new heater or replacement part from the nearest distributor and returning the claimed defective heater or part to such distributor;

c. All cost necessary or incidental for any materials and/or permits required for installation of the replacement heater or part.

5. Limitations on Implied Warranties

Implied warranties, including any warranty of merchantability imposed on the sale of this heater under state law are limited to 18 months after delivery or 12 months after commissioning duration for the heater or any of its parts. Some states do not allow limitations on how long an implied warranty lasts, so the above limitation may not apply to you.

Service Log

Issue Description	Date	Servicer

This page left blank intentionally

This page left blank intentionally

690 Maine Ave
Bangor, ME 04401
1-800-777-6953

Nyle Water Heating Systems engages in continuous improvement. Sequences, features and capabilities can change without notice at any time. Refer to most current documentation prior to installation or commissioning of all equipment.